TO THE READER

This Workshop Manual has been prepared to provide servicing personnel with information on the mechanism, service and maintenance of T1460 · T1560. It is divided into two parts, "Mechanism" and "Servicing" for each section.

■ **Mechanism**

Information on the construction and function are included. This part should be understood before proceeding with troubleshooting, disassembling and servicing.

■ **Servicing**

Under the heading "General" section comes general precautions, check and maintenance and special tools. Other section, there are troubleshooting, servicing specification lists, checking and adjusting, disassembling and assembling, and servicing which cover procedures, precautions, factory specifications and allowable limits.

All information, illustrations and specifications contained in this manual are based on the latest production information available at the time of publication.

The right is reserved to make changes in all information at any time without notice.

December '94

© KUBOTA Corporation 1994

machinecatalogic.com

(3) Carburetor and Governor Lever

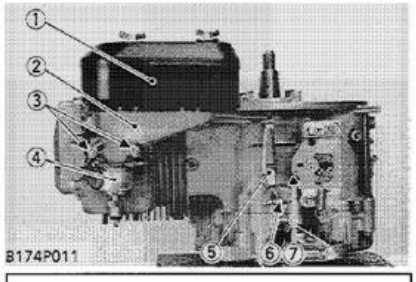

B174P011

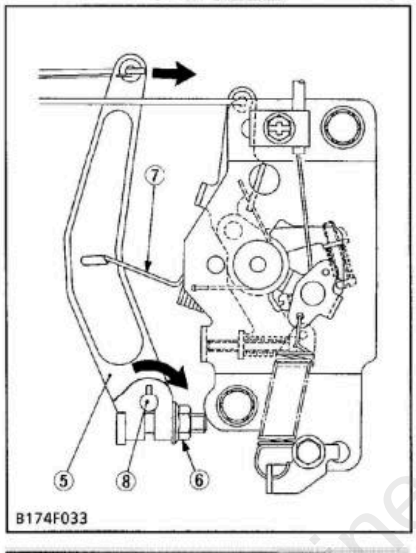

B174F033

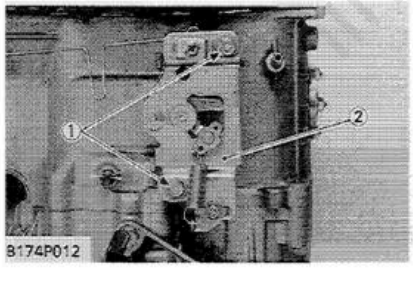

B174P012

Carburetor and Governor Lever

⚠ CAUTION

- **Gasoline is extremely flammable. Do not smoke or allow flames or sparks in your working area. Clean up any spilled gasoline immediately.**

1. Remove the air cleaner assembly (1).
2. Loosen the governor lever mounting nut (6), and remove the governor lever (5) and governor spring (7).
3. Unscrew the carburetor mounting nuts (3), and remove the intake pipe (2) and carburetor assembly (4).

(When reassembling)

■ IMPORTANT

- **Pulling the throttle valve to the fully open position with the governor lever (5), turn the governor shaft (8) clockwise (governor fully closed position) and tighten the governor lever mounting nut (6) in that position.**

Tightening torque	Governor lever mounting nut	5.88 to 7.84 N·m 0.60 to 0.80 kgf·m 4.35 to 5.75 ft-lbs

(1) Air Cleaner Assembly
(2) Intake Pipe
(3) Carburetor Mounting Nut
(4) Carburetor Assembly
(5) Governor Lever
(6) Governor Lever Mounting Nut
(7) Governor Spring
(8) Governor Shaft

Speed Control Plate

1. Unscrew the speed control plate mounting screws (1).
2. Remove the speed control plate assembly (2).

(1) Speed Control Plate Mounting Screw
(2) Speed Control Plate Assembly

[3] FUEL SYSTEM

CHECKING AND ADJUSTING

(1) Carburetor

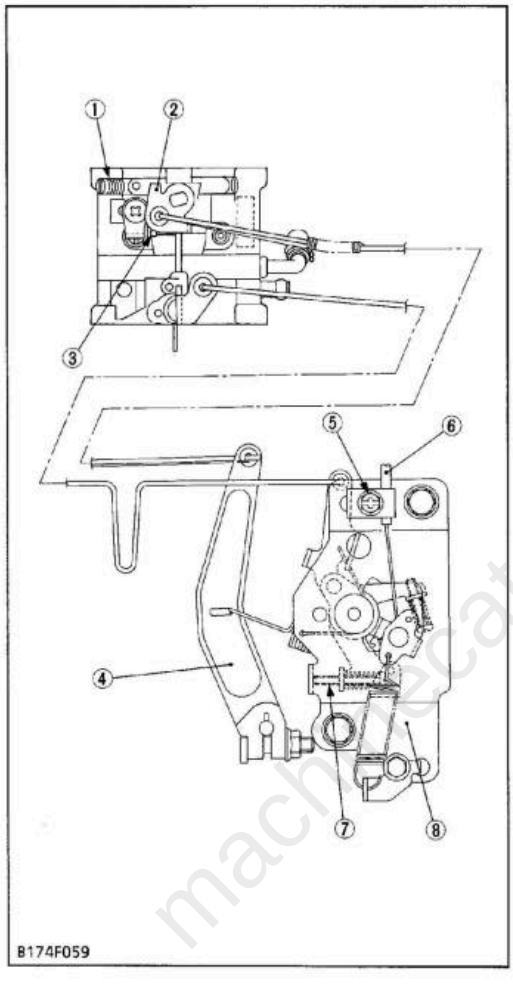

Adjusting Pilot Screw and Idle Speed

■ **IMPORTANT**

- **Adjust the carburetor as instructed below when idle speed is unstable or if speed increase during rapid acceleration is unsmooth.**

1. Turn the pilot screw (1) all the way in until it seats lightly, and then turn the pilot screw counter-clockwise by 1.5 turns. This setting is approximately correct.

■ **NOTE**

- **Screw in the pilot screw (1) using a small screwdriver [100 to 120 mm (4 to 5 in.)].**
- **Do not turn the pilot screw in too far, or the carburetor body will be damaged, and require replacement.**
- **To make fine adjustment follow the steps below.**

2. Start and warm the engine completely.
3. Move the throttle lever on panel to the "**SLOW**" position.
4. Keep the throttle lever (2) on the carburetor in the closed position (turn the governor lever (4) counter-clockwise all the way) and adjust the idle speed set screw (7) until the engine runs is less than 1450 min^{-1} (1450 rpm) using a screw driver.
5. Keep the throttle lever (2) on the carburetor in the closed position, and search for the point at which the engine speed gets the highest by slowly turning the pilot screw (1) in or out, and then turn the pilot screw (1) back out additional 1/4 turn.
6. Make adjustment by turning the throttle stopper adjusting screw (3) so that the idle speed may be kept at 1450 min^{-1} (1450 rpm) while keeping the throttle lever (2) on carburetor in closed position. (This is carburetor idle speed.)
7. Release the throttle lever (2), and adjust the idle speed set screw (7) on the control plate (8) to obtain the specified governored idle speed 1550 min^{-1} (1550 rpm).
8. If adjustment is necessary, loosen the throttle cable clamp screw (5) and adjust the throttle cable (6).

Governored idle speed	Factory spec.	1550 ± 75 min^{-1} 1550 ± 75 rpm

(1) Pilot Screw
(2) Throttle Lever
(3) Throttle Stopper Adjusting Screw
(4) Governor Lever
(5) Cable Clamp Screw
(6) Throttle Cable
(7) Idle Speed Set Screw
(8) Control Plate

machinecatalogs.com

CHECKING, DISASSEMBLING AND SERVICING

CHECKING AND ADJUSTING

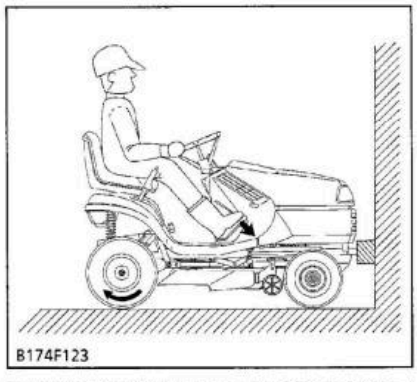
B174F123

Checking Hydrostatic Transaxle

1. Dismount the grass catcher bag and bring the vehicle on the ground or on the grassland (not on the asphalt or concrete surface).
2. Attach a wooden piece to the bumper and touch the front of vehicle to the wall.
3. Start the engine and run it at the maximum speed.
4. Depress the speed control pedal forward, and check to see that rear wheels slip.
5. If rear wheels do not slip, replace the hydrostatic transaxle assembly.

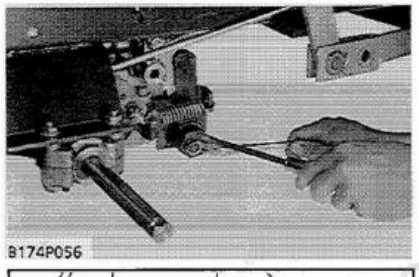
B174P056

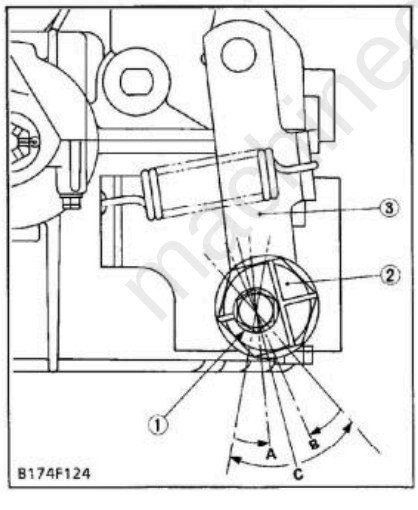

B174F124

Adjusting Neutral

1. Block the front wheels with stoppers, and lift up the rear of vehicle with a jack.
2. Remove left and right rear wheels.
3. Start the engine, and set at approx. 2500 min^{-1} (2500 rpm).
4. Loosen the holder shaft mounting screw (1).
5. Rotate the holder shaft (2) counterclockwise so the rear wheels turn forward.
6. Then rotate it clockwise until the rear wheels stop completely.
7. Put a mark on the neutral arm (3). (Position **B**)
8. Rotate the holder shaft (2) clockwise so the rear wheels turn in reverse.
9. Then rotate it counterclockwise until the rear wheels stop completely.
10. Put a mark on the neutral arm (3). (Position **A**)
11. Set the holder shaft (2) where it is right in the center between position **A** and **B**, and tighten the holder shaft mounting screw (1) firmly.
    This means the hydrostatic transaxle is fully in neutral. (Position **C**)

(1) Holder Shaft Mounting Screw
(2) Holder Shaft
(3) Neutral Arm

machinecatalogs.com

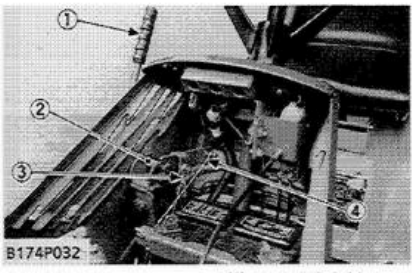

(1) Grip
(2) PTO Clutch Lever
(3) ATA PTO Cable
(4) PTO Clutch Wire

PTO Clutch Lever

1. Remove the grip (1) of PTO clutch lever.
2. Pull out the cotter pin, and remove the PTO clutch wire (4).
3. Disconnect the ATA PTO cable (3) from the PTO clutch lever. (T1560 only)
4. Unscrew the PTO clutch lever mounting screws, and remove the PTO clutch lever (2).

(When reassembling)
- Apply oil to the PTO clutch wire.

■ IMPORTANT
- **After assembling the PTO clutch wire, be sure to adjust the PTO belt tension. (See above.)**
- **After assembling the ATA PTO cable, be sure to adjust the cable. (See page 1-48.)**

Tightening torque	PTO clutch lever mounting screw	23.5 to 27.5 N·m 2.4 to 2.8 kgf·m 17.4 to 20.3 ft-lbs

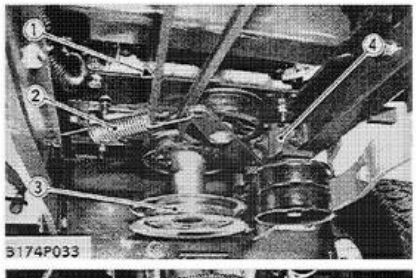

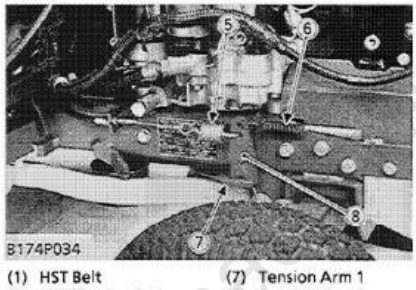

(1) HST Belt
(2) HST Tension Spring
(3) Engine Pulley
(4) Tension Bracket
(5) PTO Tension Spring
(6) Return Spring
(7) Tension Arm 1
(8) Tension Arm 2
(9) Tension Holder
(10) PTO Tension Arm
(11) HST Tension Arm

Tension Bracket

1. Remove the lower bonnet.
2. Remove the HST tension spring (2), and then remove the HST belt (1) from the engine pulley.
3. Remove the PTO tension spring (5) and return spring (6) from the tension arm 2 (8).
4. Unscrew the tension arm 2 mounting screw, and remove the tension arm 2 (8) from the tension arm 1 (7).
5. Unscrew the engine pulley mounting screw, and remove the engine pulley (3).
6. Unscrew the tension bracket mounting screws, and remove the tension bracket (4) with the PTO tension arm (10) and HST tension arm (11).

(When reassembling)
- Install the tension bracket as shown in the figure.

Tightening torque	Tension arm 2 mounting screw	23.5 to 27.5 N·m 2.4 to 2.8 kgf·m 17.4 to 20.3 ft-lbs
	Engine pulley mounting screw	48.1 to 55.9 N·m 4.9 to 5.7 kgf·m 35.5 to 41.2 ft-lbs
	Tension bracket mounting screw	23.5 to 27.5 N·m 2.4 to 2.8 kgf·m 17.4 to 20.3 ft-lbs

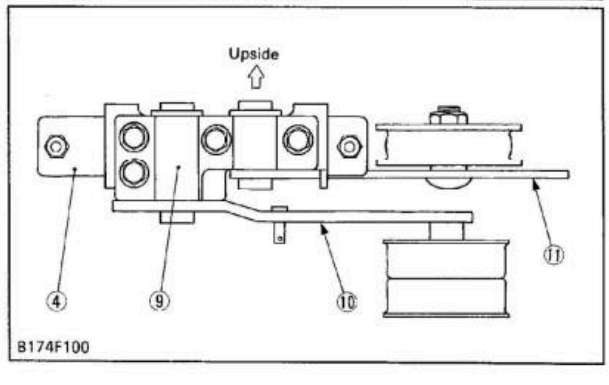

machinecatalogic.com

Full Version Available

Kubota T1560 Lawn Tractor Workshop Manual

This is a short preview. The complete manual contains all chapters, wiring diagrams, torque specifications and full service procedures.

VIEW THE FULL MANUAL

https://machinecatalogic.com/kubota-t1560-lawn-tractor-workshop-manual/