WSM

WORKSHOP MANUAL

Z122E-AU,Z121S-AU, Z125E-AU,Z125S-AU

Kubota

KiSC issued 11, 2015 A

machinecatalogue.com

Purging Procedures

Due to the effects air has on efficiency in hydrostatic drive applications, it is critical that it is purged from the system.

Air creates inefficiency because its compression and expansion rate is higher than that of the oil approved for use in hydrostatic drive systems.

These purge procedures should be implemented any time a hydrostatic system has been opened to facilitate maintenance or the oil has been changed.

The resulting symptoms in hydrostatic systems may be:

1. Noisy operation.
2. Lack of power or drive after short term operation.
3. High operation temperature and excessive expansion of oil.

Before starting, make sure the transaxle is at the proper oil level. If it is not, fill to the specifications outlined in this manual.

The following procedures are best performed with the machine drive wheels off the ground. Then repeated under normal operating conditions. If this is not possible, then the procedure should be performed in an open area free of any objects or bystanders.

1. Disengage the brake if activated.
2. With the bypass valve open and the engine running, slowly move the motion control levers in both forward and reverse directions (5 or 6 times).
3. With the bypass valve closed and the engine running, slowly move the motion control levers in both forward and reverse directions (5 to 6 times). Check the oil level, and add oil as required after stopping the engine.
4. It may be necessary to repeat steps 2 and 3 until all the air is completely purged from the system. When the transaxle operates at normal noise levels and moves smoothly forward and reverse at normal speeds, then the transaxle is considered purged.

9Y1211131GEG0033US0

Changing Transaxle Fluid

1. (See "Replacing Transaxle Oil and Filter Cartridge" (G-34) in "CHECK POINTS OF EVERY 400 HOURS".)

9Y1211131GEG0034US0

machinecatalog.com

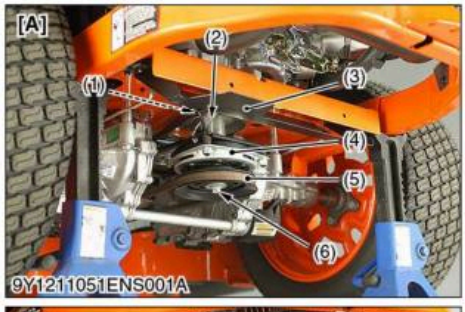

9Y1211051ENS001A

9Y1211051ENS002A

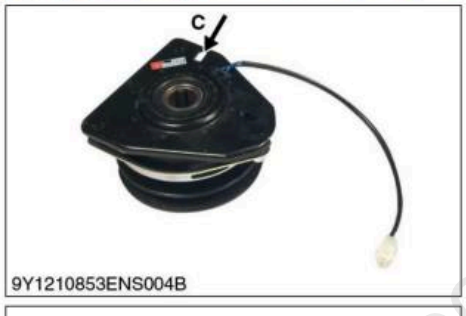

9Y1210853ENS004B

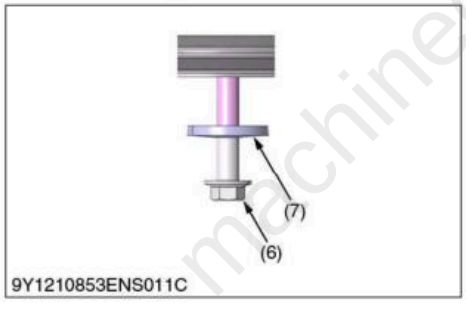

9Y1210853ENS011C

Removing the Electric Clutch

DANGER

To avoid serious injury:

- **Park the machine on a hard and level surface.**
- **Lift up and hold with jack stands or blocking the rear of the machine, do not operate the machine during the work.**

1. Remove the air guide (3). [Except Z125E]
2. Disconnect the coupler (1).
3. Remove the mower belt (5).
4. Remove the PTO clutch stopper (2) and the flange bolt (electric clutch) (6).
5. Remove the electric clutch (4).

(When reassembling)

■ **IMPORTANT**

- **Install the PTO clutch stopper (2) to the arrow hole, next to the wire harness.**
- **Make sure to install the spring plate (7) with the cup face up.**

Tightening torque	Flange bolt (electric clutch)	63 to 72 N·m 6.4 to 7.4 kgf·m 47 to 53 lbf·ft

(1) Coupler
(2) PTO Clutch Stopper
(3) Air Guide [Except Z125E]
(4) Electric Clutch
(5) Mower Belt
(6) Flange Bolt (Electric Clutch)
(7) Spring Plate

[A] Z121S and Z125S
[B] Z122E
C: Hole

9Y1211131ENS0008US0

machinecatalogic.com

9Y1210853TXS002A

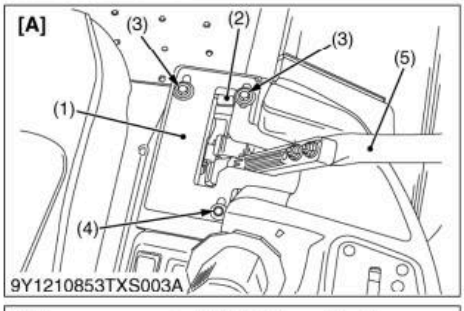

9Y1210853TXS003A

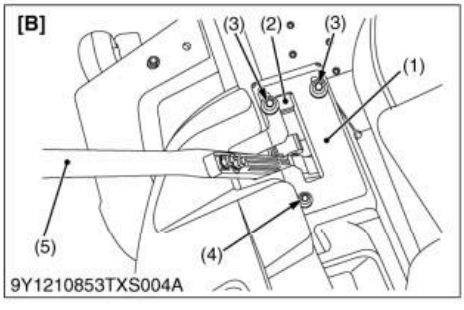

9Y1210853TXS004A

HST Neutral

1. Lift-up and secure with jack stands or blocking the rear of the machine frame.
2. Remove both rear wheels.
3. Start the engine, and operate at maximum speed.
4. Place the motion control lever (5) in **"NEUTRAL LOCK"** position.
5. Loosen the three bolts of the guide plate.
   Adjust the guide plate position until the rear axle rotation stops.
6. Tighten the rear bolt and place the lever in **"NEUTRAL LOCK"** position. Check that the rear axle does not rotate.
   If the axle does not stop rotating, adjust the **"HST NEUTRAL"** again.
7. Adjust the other side **"HST NEUTRAL"** equally.
8. After adjustment, make sure to stop the engine immediately.
9. Push the motion control lever (5) until it contacts the speed adjust plate and reaches the end of its range of motion. Then move the speed adjust plate to 2 to 3 mm backward and tighten two front bolts securely.
10. If at full speed the machine pulls one direction or the other, it is an indication that one wheel is turning faster than the other.
    To adjust the condition, proceed as follows:
    1) Park the machine on a firm and level surface.
    2) Stop the engine.
    3) Loosen two front bolts (3) of faster side.
    4) Move the speed adjust plate (2) to backward.
    5) Tighten two front bolts securely.

Tightening torque	Bolt (front, rear)	24 to 27 N·m 2.4 to 2.8 kgf·m 18 to 20 lbf·ft

(1) Guide Plate
(2) Speed Adjust Plate
(3) Bolt (Front)
(4) Bolt (Rear)
(5) Motion Control Lever

[A] RH
[B] LH

9Y1211131TXS0005US0

machineryalpedia.com

3. CHARGING SYSTEM, HOUR METER, HEAD LIGHT AND PTO CLUTCH

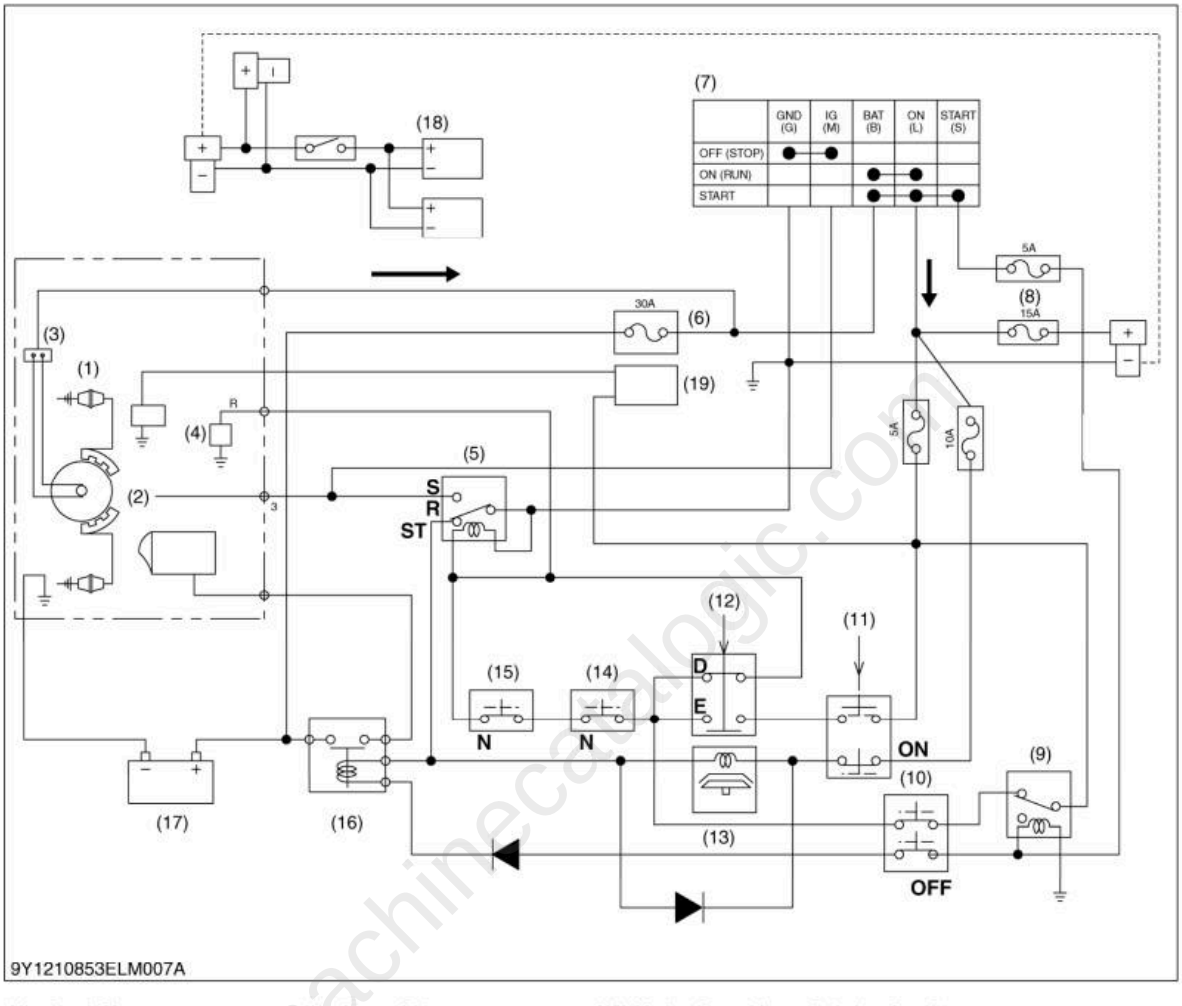

(1) Spark Plug
(2) Ignition Coil
(3) Regulator
(4) Fuel Solenoid
(5) Starter Relay
(6) Slow Blow Fuse
(7) Main Switch
(8) Fuse
(9) Starter Relay
(10) Seat Switch
(11) PTO Switch
(12) Brake Switch
(13) PTO Clutch
(14) Motion Control Lever Switch (LH)
(15) Motion Control Lever Switch (RH)
(16) Starter Solenoid
(17) Battery
(18) Head Light
(19) Hour Meter

S: Stop
R: Operate
ST: Start
N: Neutral
D: Disengage
E: Engage
OFF: OFF
ON: ON

The charging system supplies electric power for hour meter (19), head lights (18) and PTO clutch (13).
The system also charges the battery (17) while the engine operates.
The system consists of a ignition coil (2), alternator magnets in the flywheel engine and a regulator (3).

9Y1211131ELM0010US0

machinecatalogic.com

machinecatalogic.com

Full Version Available

Kubota Z125E-AU Zero Turn Mower Workshop Manual

This is a short preview. The complete manual contains all chapters, wiring diagrams, torque specifications and full service procedures.

VIEW THE FULL MANUAL