SERVICE MANUAL

NSP
10N2R/12N2R/12N2IR/
14N2R/14N2IR/
16N2R/16N2IR/16N2SR

machinecatalogic.com

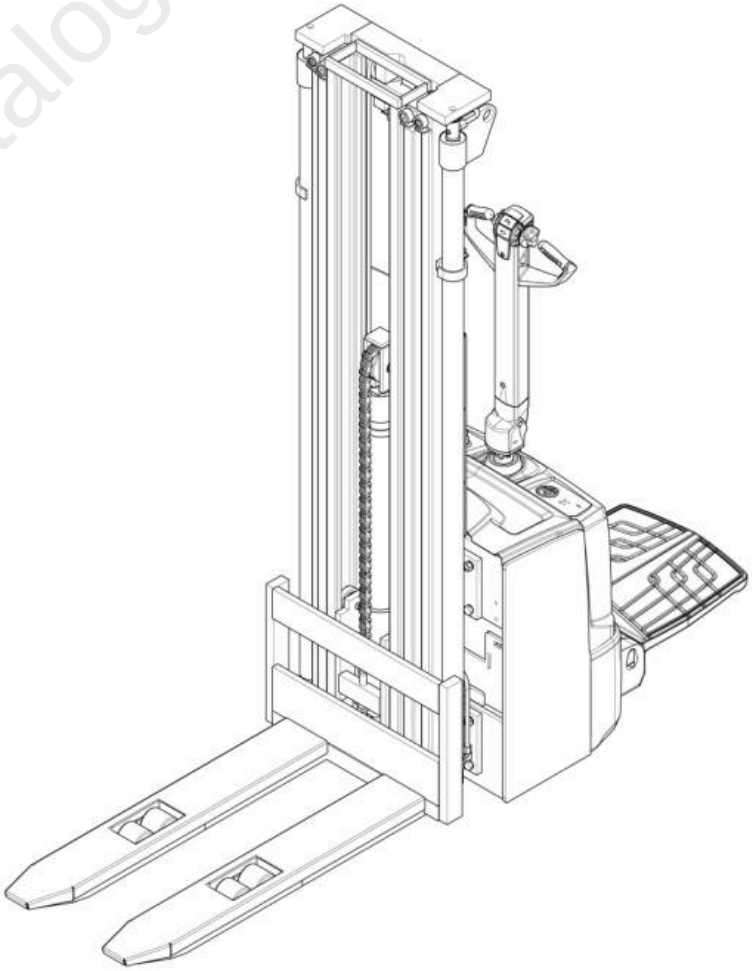

English 2013
616843

12. Remove the screws of the initial lift cylinder.	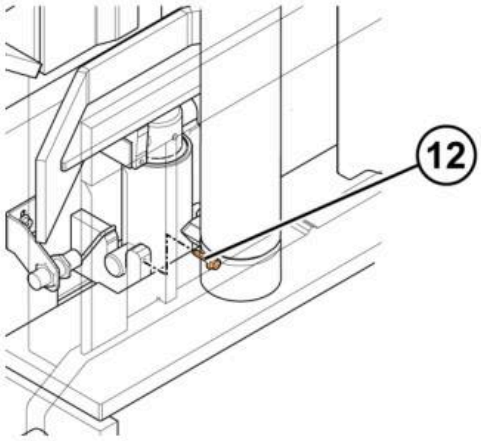
13. Disconnect the hydraulic hose. **14.** Plug the hydraulic connector on the mast unit side to prevent oil leakage.	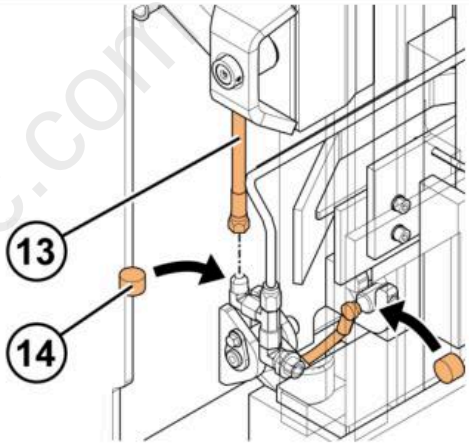
15. Remove the bolts attaching the top and bottom initial lift leverages to the truck frame. **16.** Remove the top and bottom initial leverage shafts.	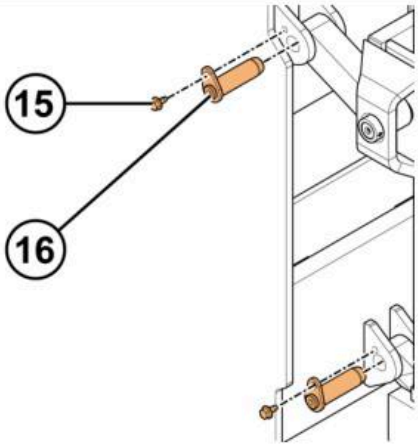

machinecatalogic.com

1. Remove the two 10 mm bolts from the electric panel.	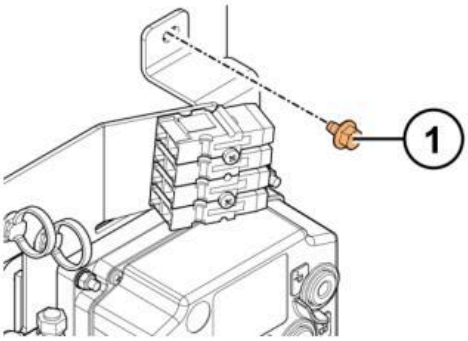
2. Turn the electric panel to the side to access the controller fan.	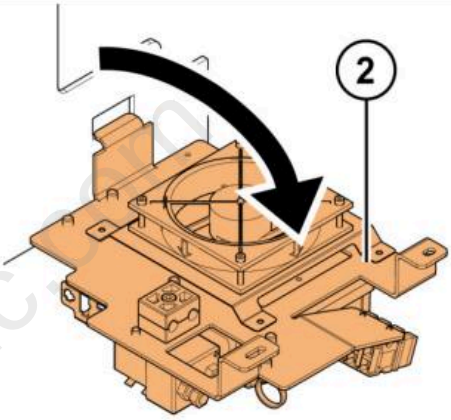
3. Remove the controller fan fixing screws. **4.** Disconnect the controller fan connector. **5.** Remove the controller fan.	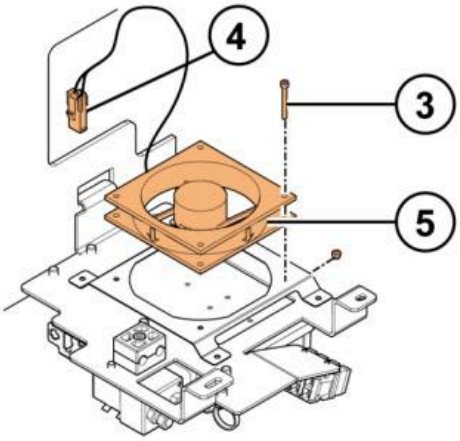

machinecatalogic.com

CODE	TRUCKTOOL AND DISPLAY DESCRIPTION		
189	Battery lock not closed BATTERY LOCK	(Alarm)	
	This alarm indicates that the battery lock is not closed. In such a case, check the battery lock state from the tester menu. If the lock is stated to be open while the battery is mechanically locked, check the battery lock sensor operation and wiring.		
190	Motor braking error BRK TIMEOUT	(Alarm)	Stored
	One possible cause for this alarm is too steep braking ramp (parameter). Try to lower the braking ramps from the parameters. Also braking at a slope when the truck is loaded can cause this error.		
192	Waiting for EPS EPS RELAY OPEN	(Alarm)	Stored
	This alarm indicates that there is some problem in the steering and the steering has frozen.		
193	Sideguard inputs illegal state SIDEGUARD INPUTS	(Alarm)	
	This alarm is caused by an invalid combination of side guard inputs. If both the side guards are in the correct position (both open or both closed), check from the tester menu if the logic inputs are the same. Check the correct positioning and operation of the side guard sensors. Also check the wiring of the sensors.		
194	Platform inputs illegal state PLATFORM INPUTS	(Alarm)	Stored
	This alarm is caused by an invalid combination of operator's platform inputs. When the operator's platform is either down with a driver standing on it or up, check from the tester menu that the logic inputs are correct. Check the correct positioning and operation of the platform sensors. Also check the sensor wiring.		
195	Platform inputs inactive WAITING DRIVER	(Warning)	
	This is a general warning indicating only that the truck is waiting for an operator.		
196	Invalid motor resistance MISMATCHED RM	(Alarm)	Stored
	This alarm occurs if the motor resistance is different than the value of the parameter MOTOR RESIST. In such a case, teach the new motor resistance value by setting the parameter MOTOR RESIST to 0 and saving the value while holding the tiller arm in the drive position. Restart the truck after the main contactor is opened. The new settings are active after the restart.		

machinecatalogic.com

IDENTIFIER	DESCRIPTION
M#	Motor
V#	Diode
A#	Controllers and displays
K#	Contactors and relays
X#	Connector. Contact numbers are marked on individual wires.
XX#	Splice. Multiple wires are connected together at this point.

Figure 85 shows the reference to which Figure 84 referred.

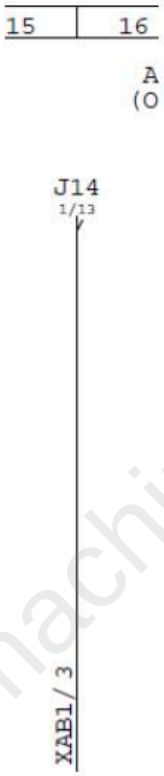

Figure 85. Page 8, zone 16, wiring reference J14

Once again, note the numbers below the wiring reference J14. These numbers (1/13) direct you back to the page (and zone) shown in Figure 84.

Figure 86. Page numbers (4/9), circuit diagram number (3-7109) and revision letter (H)

machinecatalogic.com

11 TruckTool Diagnostics

Software maintenance can be performed with a diagnostics application called TruckTool. This program runs on a laptop PC and connects to the truck's data bus (CAN) via a special adapter and wire harness.

TruckTool can be used to receive, display and modify settings, update (flash) controller firmware, reset settings to hardware defaults, review and clear alarms, perform calibrations, execute a quick truck setup and monitor digital and analogue inputs and outputs.

The TruckTool program's usage instructions are available in the application itself. Additional training is required to use the program.

Figure 129. TruckTool Diagnostics

machinecatalogic.com

Table 2. Level of battery charge indications

LED DISPLAY	DESCRIPTION
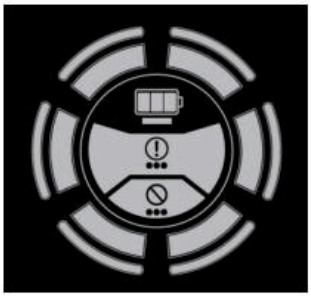	Green light in all six dial segments = Battery charge level at 70 - 100%
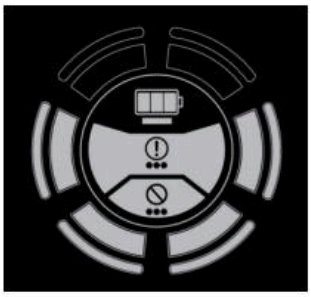	Yellow light in the bottom four dial segments = Battery charge level at 40 - 70%
	Red light in the bottom two dial segments = Battery charge level at 20 - 40%
	Slowly flashing red light in the bottom two dial segments = Battery charge level at 0 - 20% (battery is empty, recharge immediately)

In case of a warning or error, press and hold down the brake release button to read the warning or error code. The LED display uses a flashing light sequence to indicate the error code as explained in Table 3.

machinecatalogic.com

15.6.1 Installation of the internal charger and the internal charger connector

1. Open the front cover with controls. For instructions, see section 5.4.1.	
2. Screw the internal charger onto the truck frame.	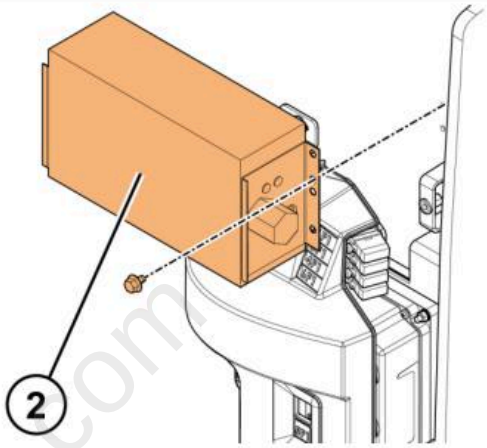
3. Check that the charging curve's selection disk is in the correct position (the arrow points to 0).	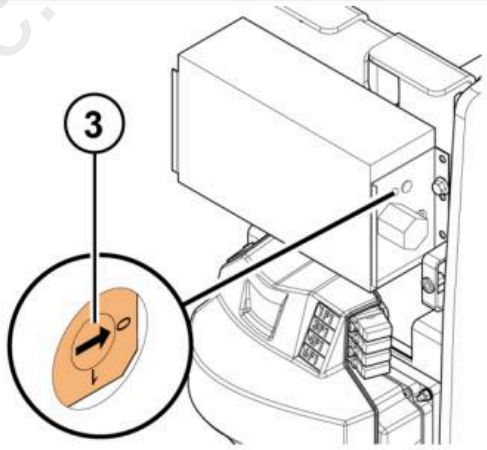
4. Screw the internal charger's LED indicator into the front cover with controls, covering the screw ends with stickers. **5.** Connect the LED indicator wire connector.	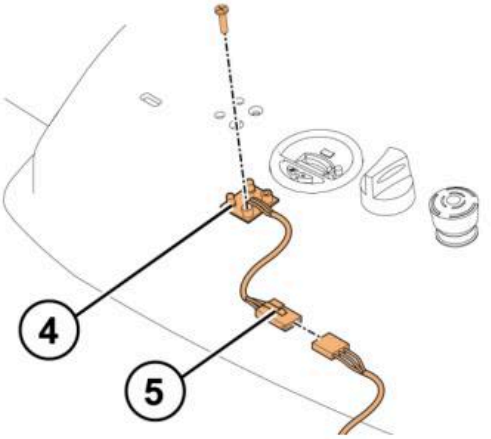
6. Connect the wires according to the truck model specific schematic diagram (see Figure 139).	

machinecatalogic.com

Lift cylinder configurations

Standard models (-)

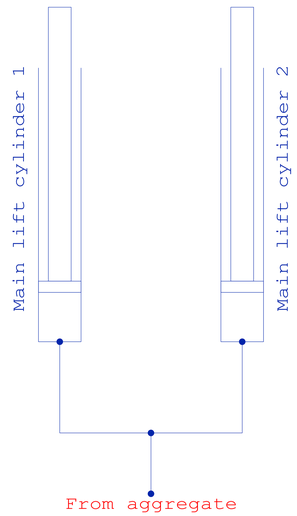

Freelift (EV) models

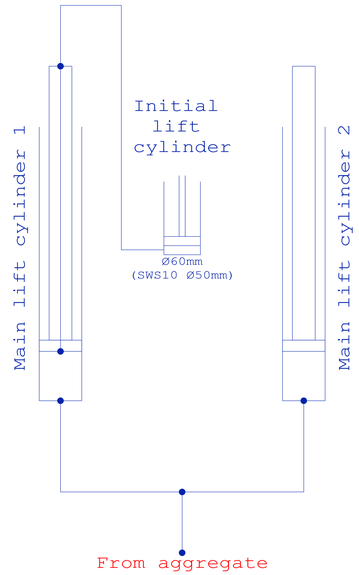

Main cylinder effective area diameters:

DS	2x Ø40mm
DEV	2x Ø30mm
TR	2x Ø50mm
TREV	2x Ø40mm

Sidesupport legs

Truck must be equipped with initial lift aggregate for this option.

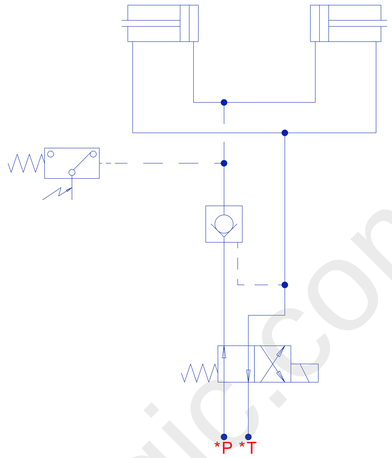

*P : Connected to Initial lift port
*T : Tank connection. No free port present, must be done manually.

Power-packs

NSP10N2:
Electric motor - 2.2 kW (24 VDC)
Pump displacement - 3 cc

NSP12/14N2:
Electric motor - 2.2 kW (24VDC)
Pump displacement - 4 cc

NSP16N2:
Electric motor - 3.2 kW (24VDC)
Pump displacement - 5 cc

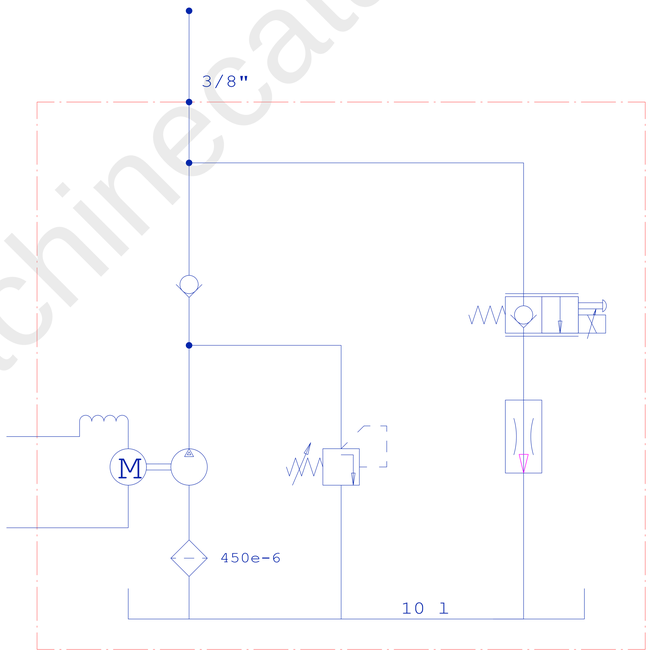

Standard models

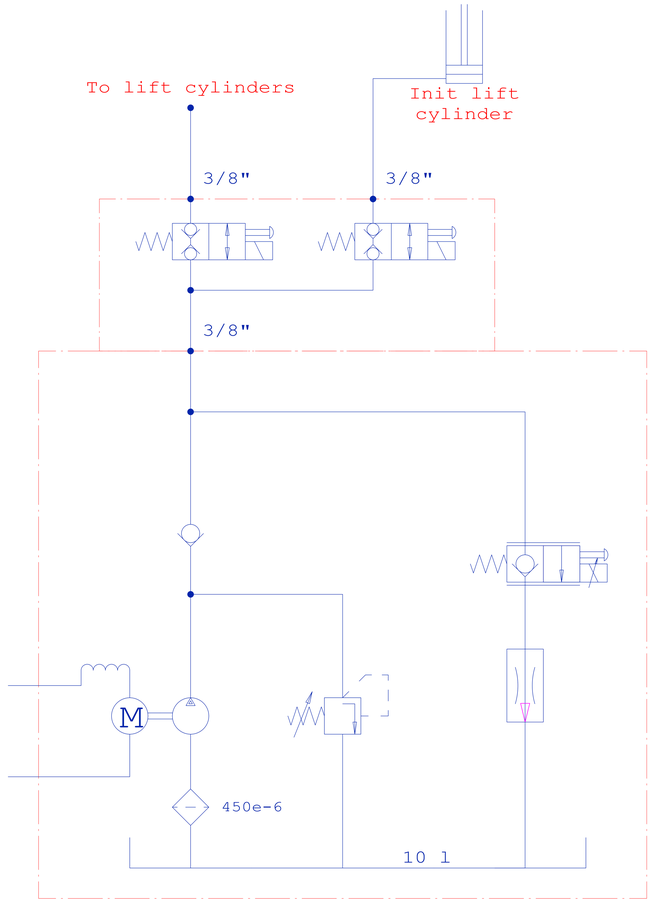

Initial lift models

	DATE:	NAME:
DESIGN.	2012-05-16	EP
CHECK.		
APPROV.		

PIIRIKAAVIO
CIRCUIT DIAGRAM

NSP12/16N2I,NSP12/16N2R
HYDRAULIKAAVIO
HYDRAULIC SCHEMA

1 / 0

REV

3-7506_HS

CHANGE:
NAME:
DATE:
REV

machinecatalogic.com

machinecatalogic.com

Full Version Available

Caterpillar NSP16N2SR Stacker Service and Operator Manual (616843)

Caterpillar NSP16N2SR Stacker service manual, covers mast, hydraulics, drive unit, wiring, and diagnostics. Downloadable PDF format.

VIEW THE FULL MANUAL