TADANO FAUN

Trouble Shooting & Maintenance Manual

ATF 130G – 5

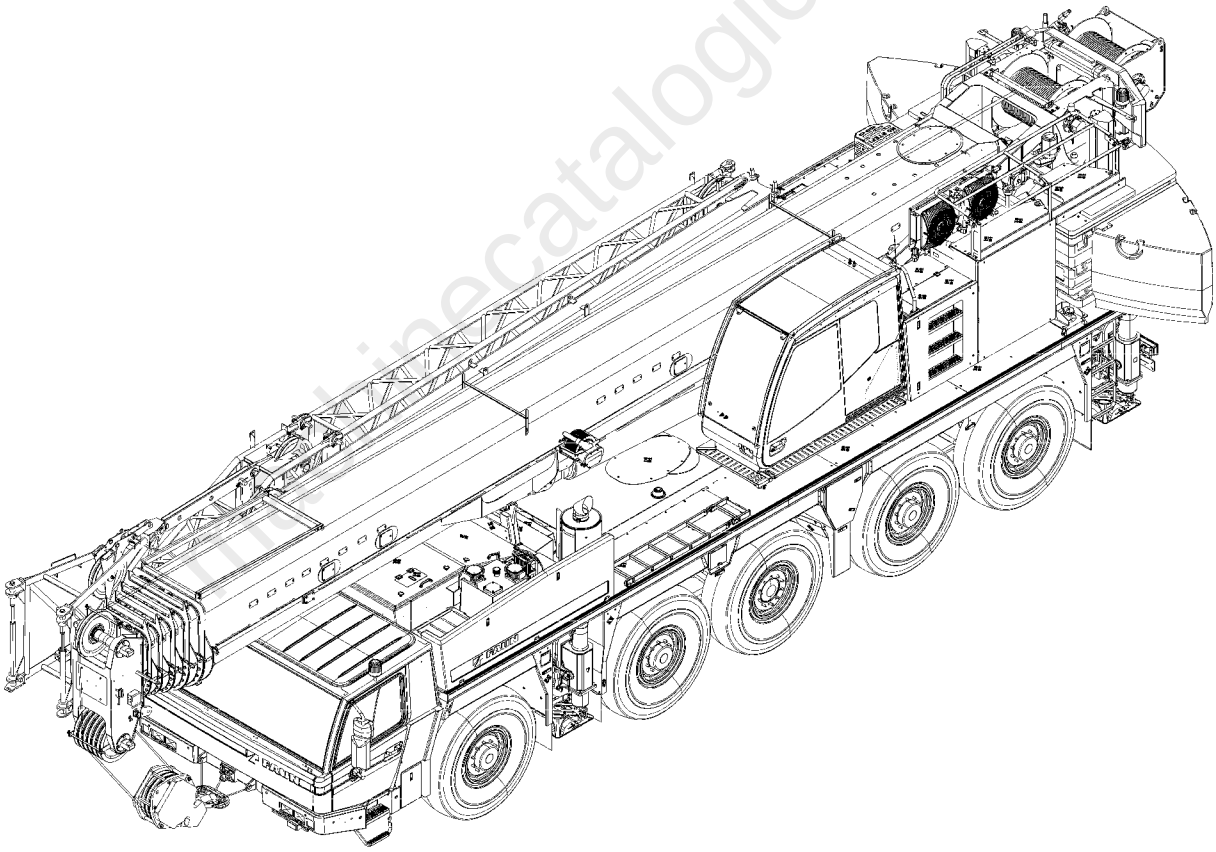

08284

www.pinecatalogic.com

FAUN **Load rating chart ATF 130G-5**

Lifting capacities in metric tons acc. to EN 13000, at telescopic boom
Counterweight 0t
On outriggers, 360° working area
Outriggers extended, outrigger base 6,20m

Working radius [m]	Boom length [m]																		Working radius [m]
	25.8		25.8		25.8		30.1		30.1		30.1		30.1		34.4		34.4		
	∠ °		∠ °		∠ °		∠ °		∠ °		∠ °		∠ °		∠ °		∠ °		
2.7																			2.7
3.0																			3.0
3.5	79	50.0	79	46.6	79	34.8													3.5
4.0	78	50.0	78	46.6	78	33.0													4.0
4.5	77	42.4	77	44.8	77	31.1	80	35.0	80	37.5	80	40.2	80	26.7					4.5
5.0	76	36.2	76	38.4	76	29.4	79	30.0	79	32.2	79	34.8	79	25.6	80	28.6	80	31.0	5.0
6.0	74	27.6	74	29.6	74	26.5	77	22.8	77	24.8	77	27.1	77	23.3	79	22.2	79	24.3	6.0
7.0	72	21.9	72	23.7	72	24.1	75	17.8	75	19.8	75	21.8	75	21.2	77	17.7	77	19.7	7.0
8.0	69	17.9	69	19.5	69	20.4	73	14.3	73	16.1	73	18.0	73	19.4	75	14.4	75	16.2	8.0
9.0	67	14.8	67	16.3	67	17.2	71	11.6	71	13.3	71	15.2	71	16.5	74	11.8	74	13.6	9.0
10.0	64	12.5	64	13.9	64	14.7	69	9.5	69	11.2	69	12.9	69	14.2	72	9.8	72	11.6	10.0
11.0	62	10.6	62	12.0	62	12.8	67	7.8	67	9.4	67	11.1	67	12.3	70	8.2	70	9.9	11.0
12.0	59	9.0	59	10.4	59	11.2	64	6.4	64	8.0	64	9.6	64	10.8	68	6.9	68	8.5	12.0
14.0	53	6.2	53	7.6	53	8.3	60	4.3	60	5.8	60	7.3	60	8.4	65	4.8	65	6.4	14.0
16.0	47	4.4	47	5.6	47	6.3	55	2.6	55	3.9	55	5.4	55	6.4	61	3.2	61	4.7	16.0
18.0	41	3.0	41	4.2	41	4.8	50	1.2	50	2.5	55	3.9	50	5.0	57	2.0	57	3.3	18.0
20.0	33	2.0	33	3.1	33	3.7			45	1.5	45	2.8	45	3.8			53	2.3	20.0
22.0	22	1.2	22	2.3	22	2.9					39	2.0	39	3.0			48	1.4	22.0
24.0											31	1.3	31	2.3					24.0
26.0													22	1.7					26.0
28.0																			28.0
30.0																			30.0
Tel.	Telescoping sequence [%]																		Tel.
1	0		0		0		92		46		0		0		92		46		1
2	46		0		0		46		46		46		0		46		46		2
3	46		46		0		46		46		46		0		46		46		3
4	46		46		46		0		46		46		92		46		46		4
5	0		46		92		0		0		46		92		0		46		5
[illegible] [m/s]	12		12		12		12		12		12		12		12		12		[illegible] [m/s]
No.	**32**		**13**		**4**		**31**		**33**		**14**		**5**		**34**		**15**		No.

The operation manual and the notes to the load rating chart have to be observed !

machineryhub

FAUN

Outrigger reaction force chart ATF 130G-5

Outrigger reaction force **F** in [kN]
Lifting capacities **m** in metric tons acc. to EN 13000, at fly jib 3,8m / 10,2m / 18,0m / 25,0m / 32,0m,
load rating chart 99707704758
Counterweight 6,0t
On outriggers, 360° working area
Outriggers extended, outrigger base 7,50m

Boom length 12,8m

Fly jib

Working radius [m]	3,8m offset						10,2m offset						18,0m offset						25,0m offset						32,0m offset						Working radius [m]
	0°		20°		40°		0°		20°		40°		0°		20°		40°		0°		20°		40°		0°		20°		40°		
	m	F	m	F	m	F	m	F	m	F	m	F	m	F	m	F	m	F	m	F	m	F	m	F	m	F	m	F	m	F	
3.0	40.0	**332**	32.7	**283**			15.0	**178**					7.8	**185**																	3.0
3.5	40.0	**355**	31.3	**293**	25.2	**250**	15.0	**186**					7.8	**179**																	3.5
4.0	40.0	**378**	30.0	**303**	24.5	**261**	15.0	**196**					7.8	**174**																	4.0
4.5	38.9	**393**	28.9	**314**	23.8	**272**	15.0	**206**					7.8	**169**					5.1	**178**											4.5
5.0	36.8	**399**	27.8	**323**	23.2	**282**	15.0	**216**	14.1	**195**			7.8	**164**					5.1	**174**											5.0
6.0	33.3	**411**	26.0	**341**	22.2	**304**	15.0	**236**	13.0	**204**			7.8	**166**					5.1	**167**					3.5	**174**					6.0
7.0	30.4	**422**	24.4	**358**	21.3	**324**	15.0	**256**	12.1	**214**			7.5	**174**					5.1	**160**					3.5	**169**					7.0
8.0	28.0	**433**	23.1	**375**	20.5	**344**	15.0	**276**	11.3	**223**	9.1	**187**	7.1	**180**					5.1	**160**					3.5	**163**					8.0
9.0	26.0	**443**	22.0	**392**	19.9	**364**	13.8	**282**	10.6	**231**	8.7	**197**	6.7	**187**	5.2	**156**			5.1	**167**					3.5	**157**					9.0
10.0	23.2	**440**	21.0	**408**	19.5	**387**	12.6	**285**	10.0	**240**	8.4	**208**	6.3	**192**	5.0	**161**			5.1	**174**					3.5	**156**					10.0
11.0	19.6	**419**	19.9	**421**	19.2	**410**	11.4	**286**	9.4	**247**	8.0	**217**	6.0	**199**	4.7	**165**			5.1	**182**					3.5	**162**					11.0
12.0	16.7	**402**	17.0	**404**			10.4	**288**	9.0	**256**	7.8	**229**	5.7	**204**	4.5	**171**			5.1	**190**					3.5	**168**					12.0
14.0	12.3	**374**					8.9	**294**	8.2	**272**	7.3	**249**	5.1	**214**	4.1	**180**	3.5	**158**	4.9	**205**	4.5	**176**			3.5	**179**					14.0
16.0							7.8	**301**	7.6	**289**	7.0	**272**	4.6	**223**	3.8	**191**	3.3	**169**	4.7	**219**	4.0	**183**			3.5	**193**					16.0
18.0							6.9	**308**	7.1	**306**			4.2	**232**	3.5	**201**	3.1	**180**	4.4	**229**	3.6	**191**			3.5	**207**	3.1	**175**			18.0
20.0							6.1	**314**					3.9	**242**	3.3	**214**	3.0	**193**	3.8	**232**	3.3	**199**	2.8	**171**	3.2	**214**	2.8	**181**			20.0
22.0													3.6	**251**	3.1	**225**	2.9	**209**	3.4	**237**	3.0	**207**	2.6	**179**	2.8	**218**	2.6	**188**			22.0
24.0													3.3	**258**	3.0	**239**	2.8	**226**	3.0	**241**	2.8	**217**	2.5	**190**	2.5	**223**	2.3	**193**			24.0
26.0													3.1	**268**	2.9	**254**			2.7	**246**	2.6	**226**	2.3	**200**	2.2	**226**	2.2	**203**	1.9	**174**	26.0
28.0													3.0	**279**					2.4	**250**	2.4	**234**	2.2	**213**	2.0	**232**	2.0	**210**	1.8	**182**	28.0
30.0																			2.2	**256**	2.3	**245**	2.1	**227**	1.8	**237**	1.9	**219**	1.6	**188**	30.0
32.0																			2.0	**261**	2.1	**253**			1.6	**241**	1.7	**225**	1.6	**201**	32.0
34.0																			1.8	**265**					1.4	**244**	1.6	**233**	1.5	**212**	34.0
36.0																									1.3	**250**	1.5	**242**	1.4	**223**	36.0
38.0																									1.2	**256**	1.4	**250**	1.4	**239**	38.0
40.0																									1.1	**261**	1.4	**264**			40.0
44.0																															44.0
48.0																															48.0

Tel.	Telescoping sequence [%]	Tel.
1	0	1
2	0	2
3	0	3
4	0	4
5	0	5

The chart shows the maximum existing outrigger reaction forces in the worst condition, dynamic influences are not being taken into account.

machinecatalogs.com

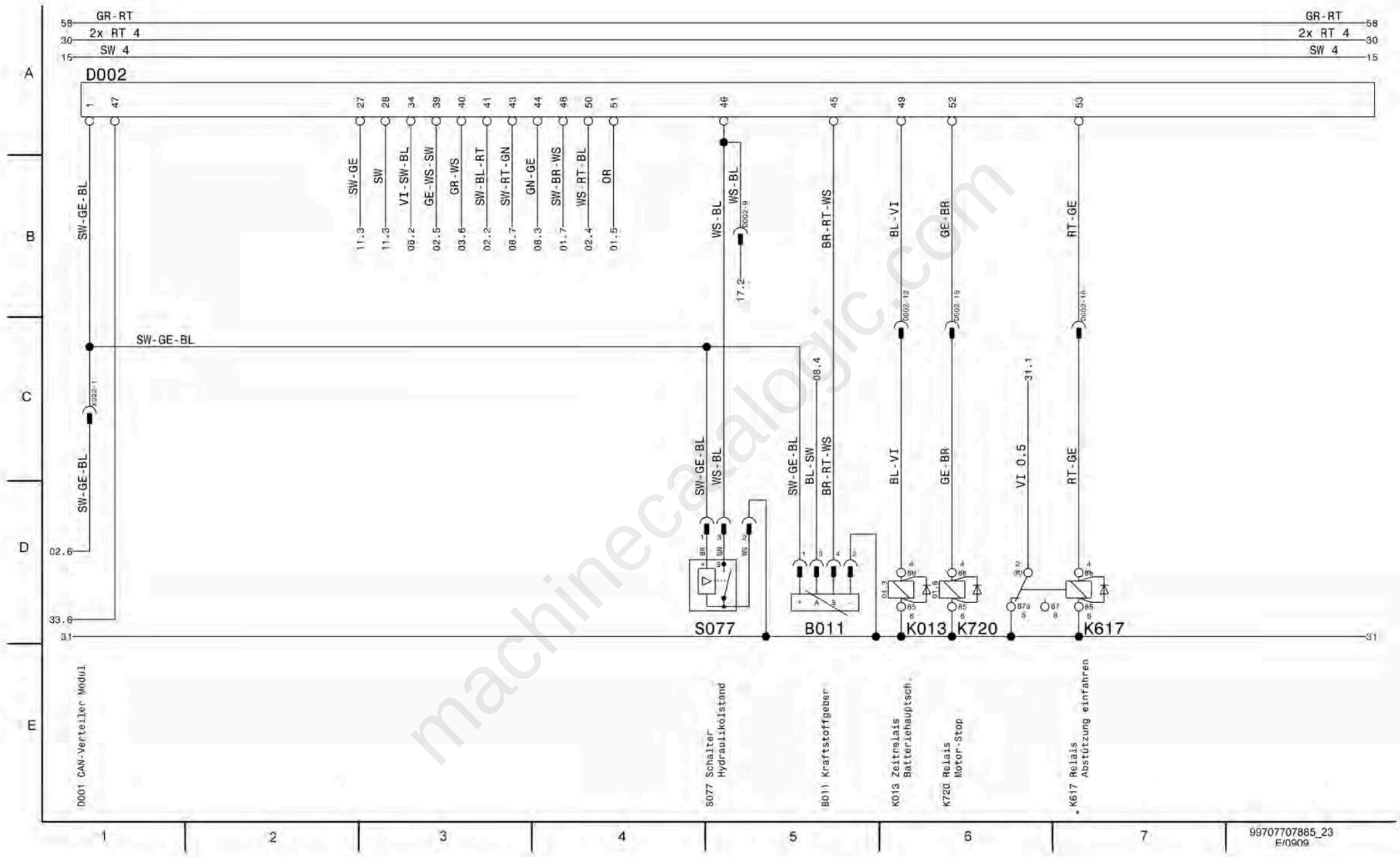

machinecatalogic.com

10 Hydraulic system

DANGER

High oil pressures in the pipes and the hydraulic system!

Risk of accident when servicing the hydraulic system when the engine is running.

1) Carry out work on the hydraulic system only when the engine is turned off.

WARNING

Risk of accident due to the damaged hydraulic pump!

The hydraulic pump can be damaged if the fuel valves are closed, which can result in a risk of accident because of an incapability to steer. The cylinders cannot be extended completely and the mobile crane cannot be levelled either.

1) Close the fuel valves only when carrying out repair work on the hydraulic system.

2) Open the fuel valves before commissioning the mobile crane.

- Check the hydraulic system regularly for leak tightness.

10.1 Checking the hydraulic oil level

WARNING

Incorrect oil level!

The hydraulic pump can be damaged if the oil level is too low, which can result in a risk of accident because of an incapability to steer. The cylinders cannot be extended completely and the mobile crane cannot be levelled either.

1) Check the oil level and replenish if necessary.

The steering system, ventilator, outrigger and suspension are fed from a common hydraulic oil tank.

- Check the hydraulic oil level when the engine is turned off, the outriggers are retracted and the mobile crane is in the driving level.
- The hydraulic oil level can be read on the sight glass (2).
- The hydraulic oil level depends on the hydraulic oil temperature, see plate (3).
- The oil is filled through the opening of the filter cover (1).
- Unscrew the filter cover (1) and replenish oil through the opening.
- Check, clean, and if necessary replace, the cover seal.
- Re-screw the filter cover (1).

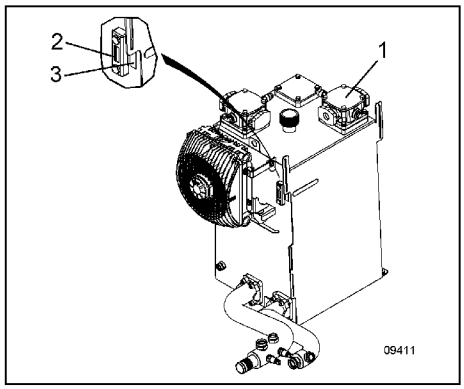

Only replenish the new hydraulic oil from clean containers.

machinecatalogic.com

machinecatalogic.com

Full Version Available

Tadano ATF 130G-5 All Terrain Crane Service Manual

Tadano ATF 130G-5 all terrain crane service manual with troubleshooting, maintenance and adjustment procedures for chassis and superstructure.

VIEW THE FULL MANUAL

https://machinecatalogic.com/tadano-atf-130g-5-all-terrain-crane-service-manual/

File Pages: 4,217 · File Count: 12 · File Language: English