Dual Path Mobile Pumps

Parts and Repair Manual

350 Series

eatoncatalogic.com

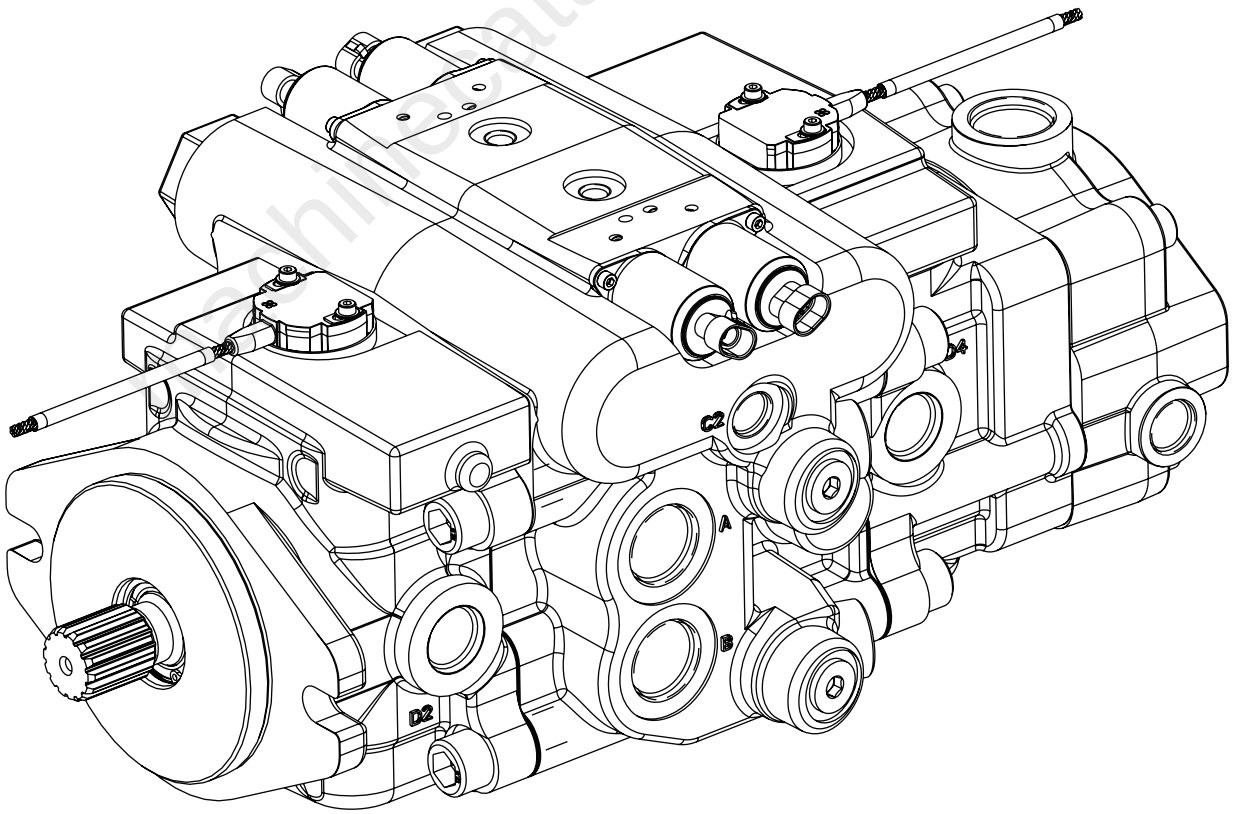

Eaton 350 Series Dual Path Hydraulic Pump Parts and Repair Manual (50940040A)

Document type: Parts and Repair Manual (repair procedures plus parts list)

Brand: Eaton

Models: 350 Series

Component: Hydraulic Pump

Publication No.: 50940040 (Rev. A)

Language: English

Main contents

- Introduction
- Exploded View
- Parts List
- Model Code
- Rotating Kit Assembly
- Drive Shafts
- Relief Valve Sub-Assembly
- Housing Identification
- Servo Piston Assembly
- Index of Mechanical Servo Controllers, Control Valve Sub-Assemblies
- Charge Pump Adapter Assembly
- Troubleshooting
- Start-Up Procedure
- How To Order

machinecatalogic.com

Sample pages follow. Full manual: machinecatalogic.com

Parts List

ITEM #	QTY	PART #	DESCRIPTION
33	1		Rotating Kit LH (2.50) - 41cc
	1		Rotating Kit RH (2.50) - 41cc
	1		Rotating Kit LH (3.00) - 49cc
	1		Rotating Kit RH (3.00) - 49cc
	1		Rotating Kit LH (3.80) - 62cc
	1		Rotating Kit RH (3.80) - 62cc
34	1		Gasket, Flange
35	1		Swashplate Sub-Assembly
37	1		Bearing, Taper
38	A/R		Shim
39	1		Drive Shaft - Rear (15T w/ Charge Pumps 1, 2)
	1		Drive Shaft - Rear (15T w/ Charge Pumps 3, 4)
	1		Drive Shaft - Rear (15T w/o Charge Pump)
	1		Drive Shaft - Rear (13T w/ Charge Pumps 1, 2)
	1		Drive Shaft - Rear (13T w/ Charge Pumps 3, 4)
	1		Drive Shaft - Rear (13T w/o Charge Pump)
	1		Drive Shaft - Rear (11T w/o Charge Pump)
40	1		Flange, Rear 2-Bolt B (Manual)
	1		Flange, Rear 2-Bolt B (Solenoid)
	1		Flange, Rear Charge Pump (Manual)
	1		Flange, Rear Charge Pump (Solenoid)
	1		Flange, Rear 2-Bolt A (Manual)
	1		Flange, Rear 2-Bolt A (Solenoid)
	1		Flange, Rear Charge Pump (HRC)
	1		Flange, Rear 2-Bolt A (HRC)
	1		Flange, Rear 2-Bolt B (HRC)
41	8		Screw, Cap, Hex Socket Head
42	2		Follower, Servo Piston
43-46	1		Relief Valve Sub-assembly (reference page 13 for further detail)
47	4		Piston Ring
48	1		Servo Piston Sub-assembly (Used with Controls: MA, MB, MC, MD, MF, SA, SB, SC)
	1		Servo Piston Sub-assembly (Used with Control: HA)
49	1		Servo Piston Sub-assembly (Used with Controls: MA, MB, MC, MD, MF, SA, SB, SC)
	1		Servo Piston Sub-assembly (Used with Control: HA)
50	2		O-Ring
51	1		Servo Cap Plug
	1		Servo Cap Plug
52	1		Servo Cap Plug
	1		Servo Cap Plug
53	2		Nut, Sealing
54	2		Magnet Carrier
55	2		Feedback Sensor (SB) - Control
	2		Feedback Sensor (SA) - Control
56	4		Screw
57	4		Washer
58	4		O-Ring
59	4		Proportional Flow Regulator (SA Control)
60	6		Washer
61	6		Screw, Cap, Hex Socket Head
62	2		Feedback Control Link
63	2		Gasket

* Reference individual assembly parts lists for further detail.

A/R - as required

achinelogic.com

Item 43, 44, 45, 46 -
Relief Valve Sub-Assembly

Item 1 -
Housing
Identification

Item 43, 44, 45, 46
Relief Valve Sub-Assembly

PART NO.	BAR [PSI]	PART NO.	BAR [PSI]
	103 [1500]		241 [3500]
	121 [1750]		259 [3750]
	138 [2000]		276 [4000]
	155 [2250]		293 [4250]
	172 [2500]		310 [4500]
	190 [2750]		328 [4750]
	207 [3000]		345 [5000]
	224 [3250]		380 [5500]

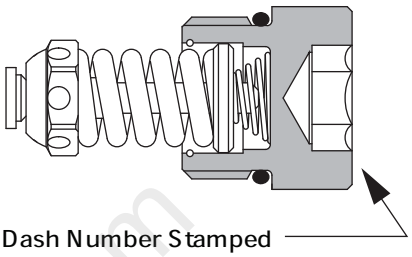

Dash Number Stamped here for Valve Pressure Setting Identification
Example: 500 x 10 = [5000 PSI] 345 bar

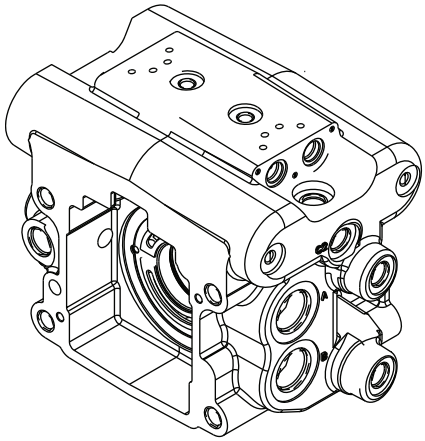

Item 1
Housing Identification

REF	PART NO.	QTY.	PUMP CONTROLS	MAIN PORTS	SPECIAL CONTROL OPTIONS
1		1	HA,MA,MB,MC,MD,ME,MF	A - 4X 1.3125-12 UN-2B SAE, Same Side, Right B - 4X 1.3125-12 UN-2B SAE, Same Side, Left	
1		1	HA,MA,MB,MC,MD,ME,MF	A - 4X 1.3125-12 UN-2B SAE, Same Side, Right B - 4X 1.3125-12 UN-2B SAE, Same Side, Left	Control Pressure EPRV Valve 12 VDC, Deutsch, -4 SAE O-Ring Port
1		1	SA, SB, SC	A - 4X 1.3125-12 UN-2B SAE, Same Side, Right B - 4X 1.3125-12 UN-2B SAE, Same Side, Left	
1		1	HA,MA,MB,MC,MD,ME,MF	C - 4X 1.3125-12 UN-2B SAE, Opposite Side	
1		1	HA,MA,MB,MC,MD,ME,MF	C - 4X 1.3125-12 UN-2B SAE, Opposite Side	Control Pressure EPRV Valve, 12 VDC, Deutsch, -4 SAE O-Ring Port
1		1	SA, SB, SC	C - 4X 1.3125-12 UN-2B SAE, Opposite Side	

Part number range is impacted by the addition of special features, special control options, sensor options, and pump controls. Please reference the pump assembly parts list for the exact housing part number.

machinecatalogic.com

Item 64, 65
Mechanical Servo Destroke Valve — Option 2 (MA, MB, MC, MD, ME, MF)*

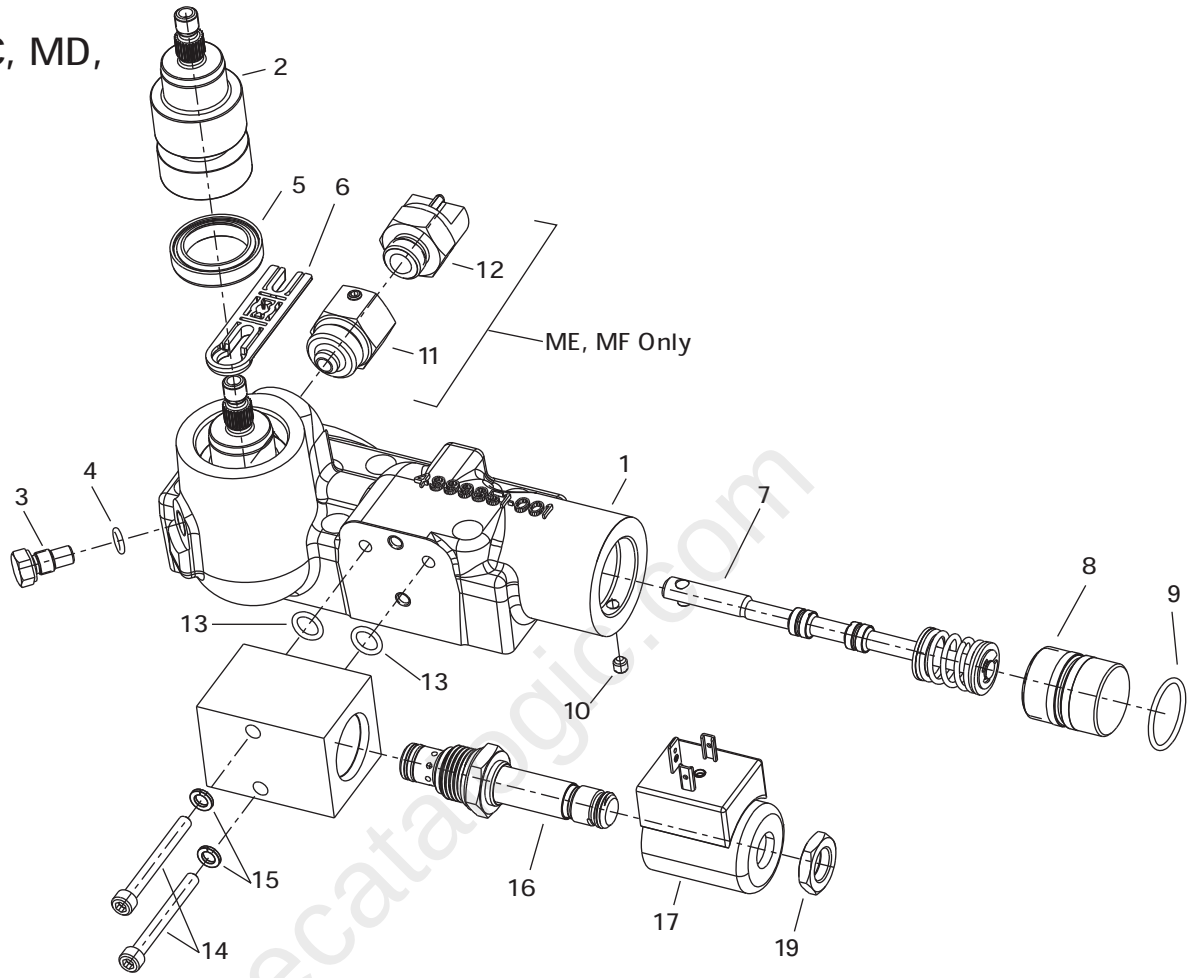

Item 64, 65
Control Valve Sub-Assembly — Destroke Valve Option 2

REF	PART NO.	QTY.	DESCRIPTION
1		1	Housing, Control
2		1	Input Control Shaft Sub-Assembly
3		2	Plug
4		3	O-Ring
5		1	Seal, Shaft
6		1	Link, Feedback
7		1	Spool Sub-Assembly
8		1	Plug
9		1	O-Ring
10		1, 2(MD, ME, MF)	Set Screw
11		1	Adaptor Assembly, Neutral L/O
12		1	Switch, Netral L/O
13		2	O-Ring
14		2	Screw, Cap
15		2	Washer, Lock
16		1	Valve
17		1	Coil
18		1	Manifold
19		1	Nut

*reference Index of Mechincal Servo Controllers on page 16.

machinecatalogic.com

Assembly

Servo Piston Assembly

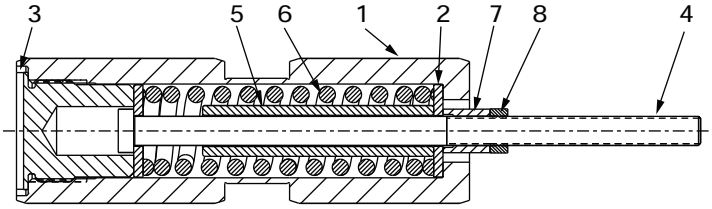

REF	PART NO.	QTY.	DESCRIPTION
1		1	Servo Piston
2		2	Spring Retainer
3		1	Plug, Servo Piston
4		1	Servo Piston Bolt
5		1	Spring Stop
6		1	Spring
7		1	Nut, Hex
8		1	Thin Finished Hex Nut, UNF



Step 1

Hold a servo piston bolt (item 4) head end down, on a work surface.



Step 2

Slide a spring retaining washer (item 2) onto the servo piston bolt so that the stamped word "IN" faces up, toward where the spring will go.



Step 3

Slide the spring (item 6) and springstop over the bolt so that both parts rest on the spring retaining washer.

Note: If assembling a HRC controlled pump, a second spring will be installed in place of the displacement limiter.



Step 4

Place the second spring retaining washer (item 2) over the servo piston bolt, with the stamped word "IN" facing the spring.



Step 5

Thread a spring compression nut (item 7) onto the servo piston bolt, with the inside counterbored (smooth) end facing the spring. Tighten the spring compression nut until it is snug against the spring retaining washer.

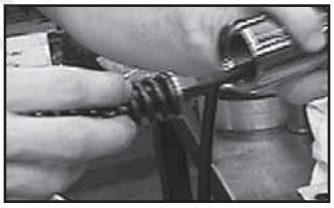

Step 6

Insert the servo piston bolt assembly into the piston (item 1), threaded end first.

Step 7

Thread a piston plug (item 3) into the open end of the servo piston.

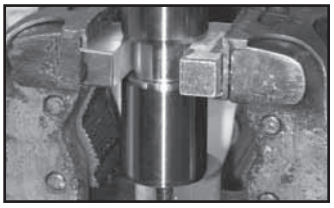

Step 8

Using a vise and two pieces of shim stock, grip the piston by the recessed groove. Do not mar the rounded surfaces of the servo piston.

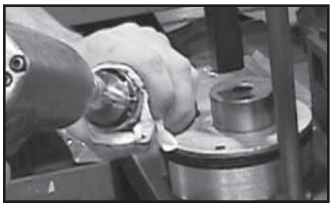

Step 9

Tighten the piston plug (item 3) to 71 ±3 n/m (52.4±2.2 lb-ft).

machinecatalogic.com

Assembly

Front Pump Assembly

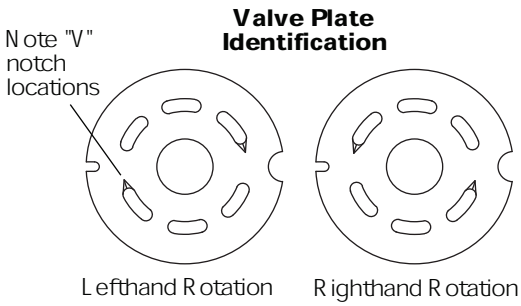

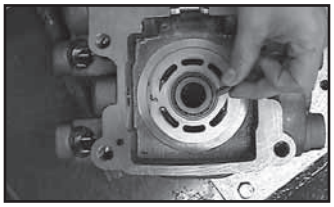

Step 1

Turn the housing so that the bearing bore faces up.

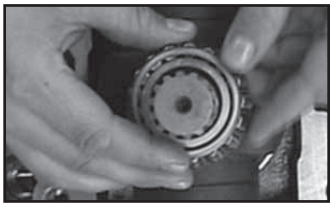

Step 2

Insert a roll pin 16026-610 into the guide hole near the bearing bore; tap it in firmly with a rubber mallet.

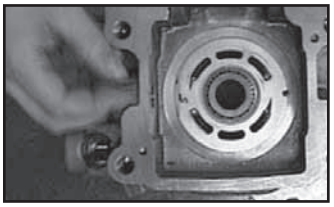

Step 3

Insert 52mm tapered roller bearing 5988197-001 in bearing bore, with taper narrowing from top to bottom; bearing cup should rest on snap ring.

Step 4

Set the valve plate (Refer to Item 18, page 5 for part number) over the bearing bore, aligning the notch with the roll pin.

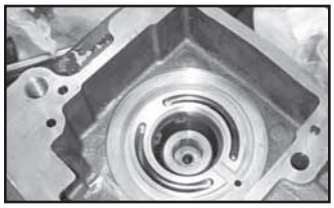

Step 5

For a pump with left-hand rotation, the front valve plate should also have left-hand rotation, and vice versa for right-hand rotation. The valve plates are labeled according to direction.

REFERENCE VALVE PLATE IDENTIFICATION ABOVE

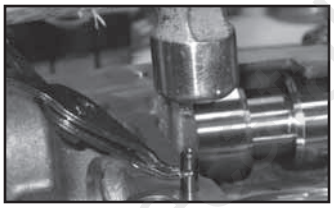

Step 6

Insert roll pins 16026-810 in the two guide holes for the gasket. Tap them firmly in place with a rubbermallet.

Step 7

Lubricate the valve plate and each piston bore in the cylinder barrel with clean hydraulic fluid.



Step 8

Center the cylinder barrel on the valve plate with the brass shoes facing up; apply clean hydraulic fluid to the brass shoes.

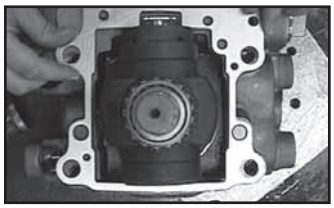

Step 9

Set the gasket 5989712-001 on the roll pins.

Step 10

Insert the front pump shaft through the rotating kit until it engages the spline.

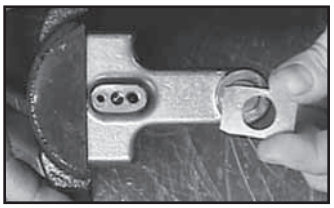

Step 11

Place a follower 4999637-001 over the dowel pin on one of the swash arms.

Step 12

Lower the swash plate assembly into the housing so that the flat side of the plate rests on the brass shoes, and the follower fits in the groove on the servo piston.

machinerylogic.com

machinecatalogic.com

Full Version Available

Eaton 350 Series Dual Path Hydraulic Pump Parts and Repair Manual (50940040A)

Eaton 350 Series Dual Path Hydraulic Pump parts and repair manual 50940040 Rev. A: assemblies, parts list, troubleshooting, start-up. Instant PDF download.

VIEW THE FULL MANUAL

Publication No.: 50940040 (Rev. A) · Language: English