1000M

Compact Excavator

PARTS MANUAL

PART #50940499

Revision A - 08/17

machinecatalogic.com

Mustang 1000M Compact Excavator Parts Manual (50940499A)

Document type: Parts Manual (illustrated parts catalogue with part numbers)

Brand: Mustang

Models: 1000M

Machine: Compact Excavator

Publication No.: 50940499 (Rev. A)

Edition date: August 2017

Language: English

Main contents

- Introduction
- Special Tools, Paint
- Gaskets, Belts, Filters Quick-Reference
- Figure Index (1) - Main Parts
- Figure Index (2) - Hydraulic Section
- Fig. 2 - Label (Exterior)
- Fig. 3 - Label (Bonnet Inside)
- Fig. 5 - Label (Cabin)
- Fig. 6 - Label (Quick Coupler)
- Fig. 7 - Silencer
- Fig. 8 - Air Cleaner
- Fig. 9 - Accelerator
- Fig. 10 - Engine Mount
- Fig. 11 - Radiator
- Fig. 12 - Radiator Mount
- Fig. 13 - Sub Tank
- Fig. 14 - Fuel Tank
- Fig. 15 - Fuel Piping
- Fig. 16 - Around the Engine
- Fig. 17 - Around the Control Valve
- Fig. 18 - Battery
- Fig. 19 - Dummy Connector
- Fig. 20 - Coupler
- Fig. 21 - Seat Mount
- Fig. 22 - Starter Switch
- Fig. 23 - Travel Alarm
- Fig. 24 - Hyd. Oil Switch
- Fig. 25 - Controller
- Fig. 26 - Work Lamp
- Fig. 27 - Indicator Box
- Fig. 28 - Quick Coupler (Switch Box)
- Fig. 29 - Air Conditioner (Cabin Mount)
- Fig. 30 - Air Conditioner (Piping)

machinecatalogic.com

Sample pages follow. Full manual: machinecatalogic.com

Ref. No.	Part No.	Description	Qty.
1	50280927	BATTERY CABLE/NEGATIVE	1
2	50280773	RETAINER, BATTERY	1
3	50280887	ROD	2
4	N/A	BATTERY *	1
5	186593	WASHER 8	2
6	50282514	BOLT M10X 16	1
7	50282596	NUT M 8	4

* Purchase locally. Group size 95H; 650 CCA.2

machinecatalogic.com

FIG. 37 - TRACK ROLLER

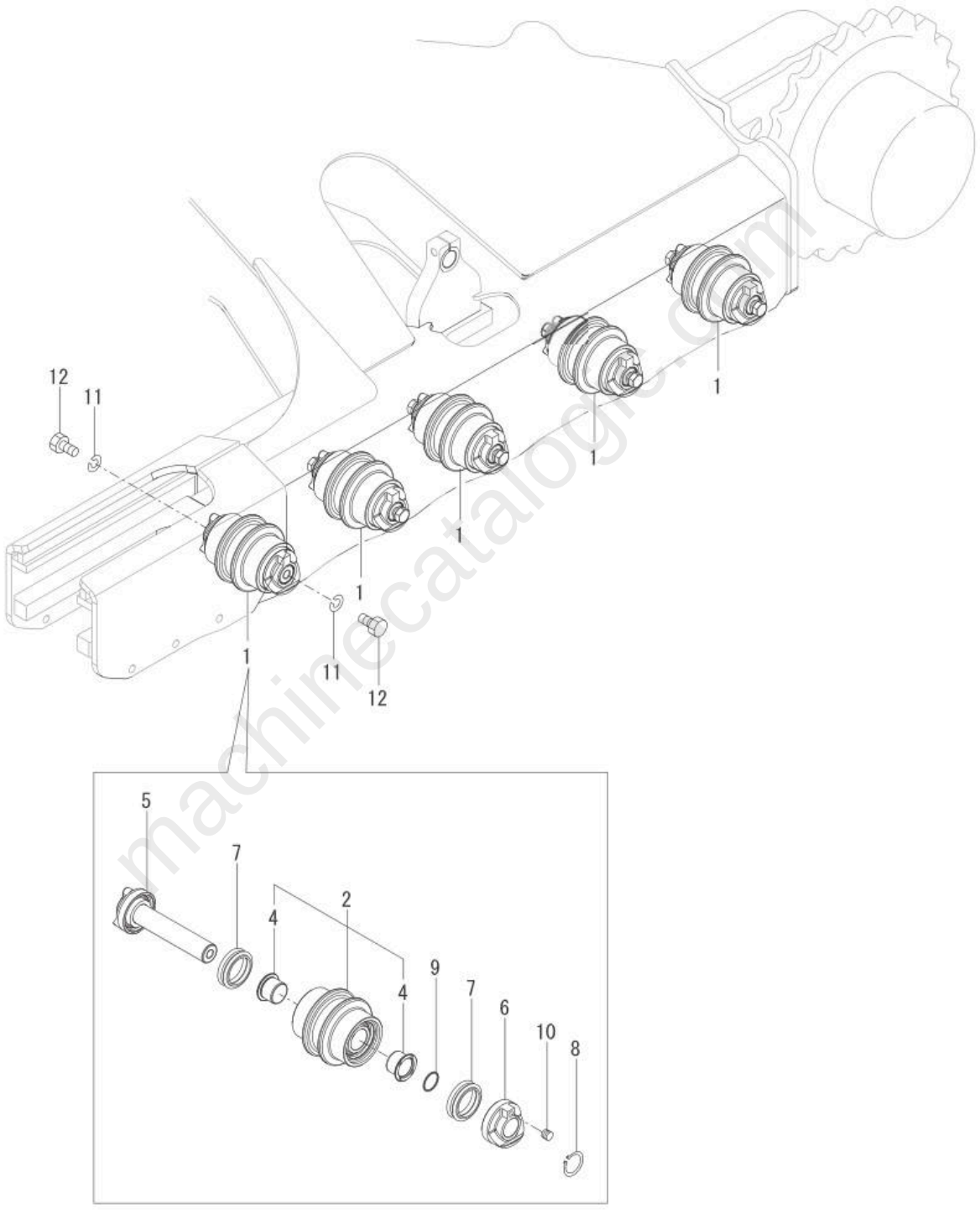

machinecatalogs.com

FIG. 43 - SWING PEDAL

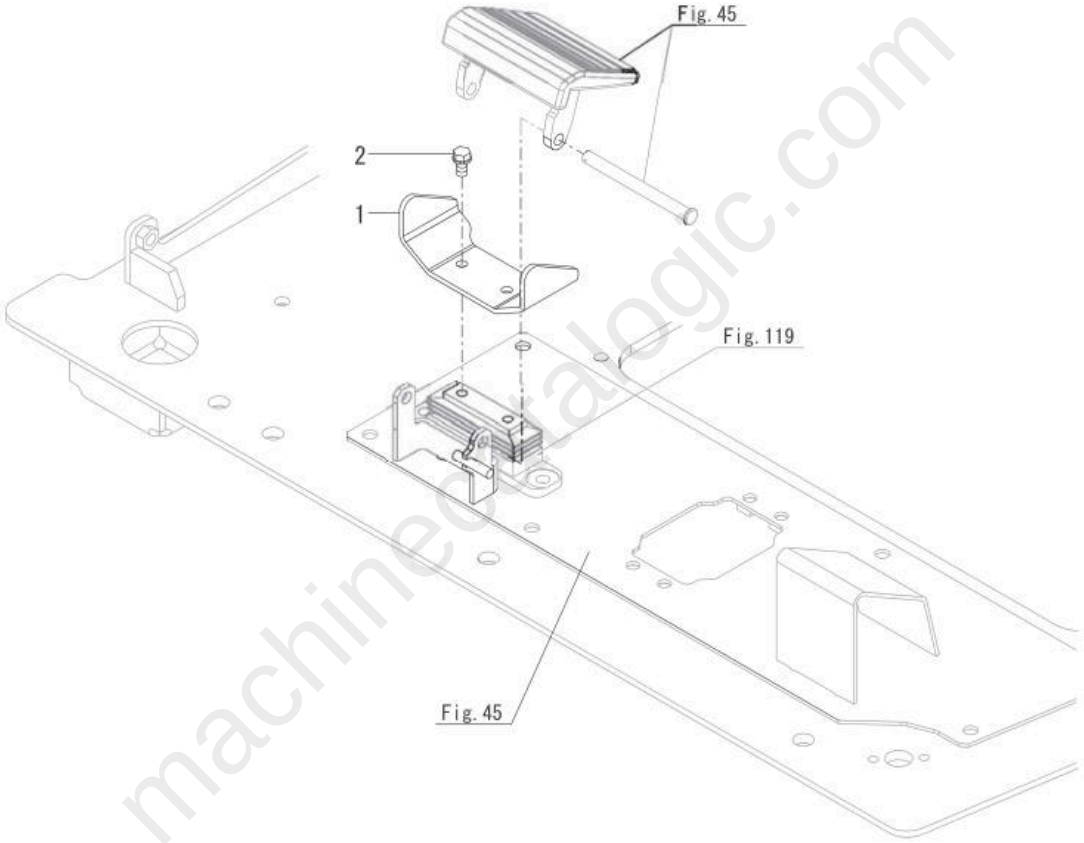

machinecatalogic.com

FIG. 75 - CABIN MOUNT (ANTI-VIBRATION MOUNT)

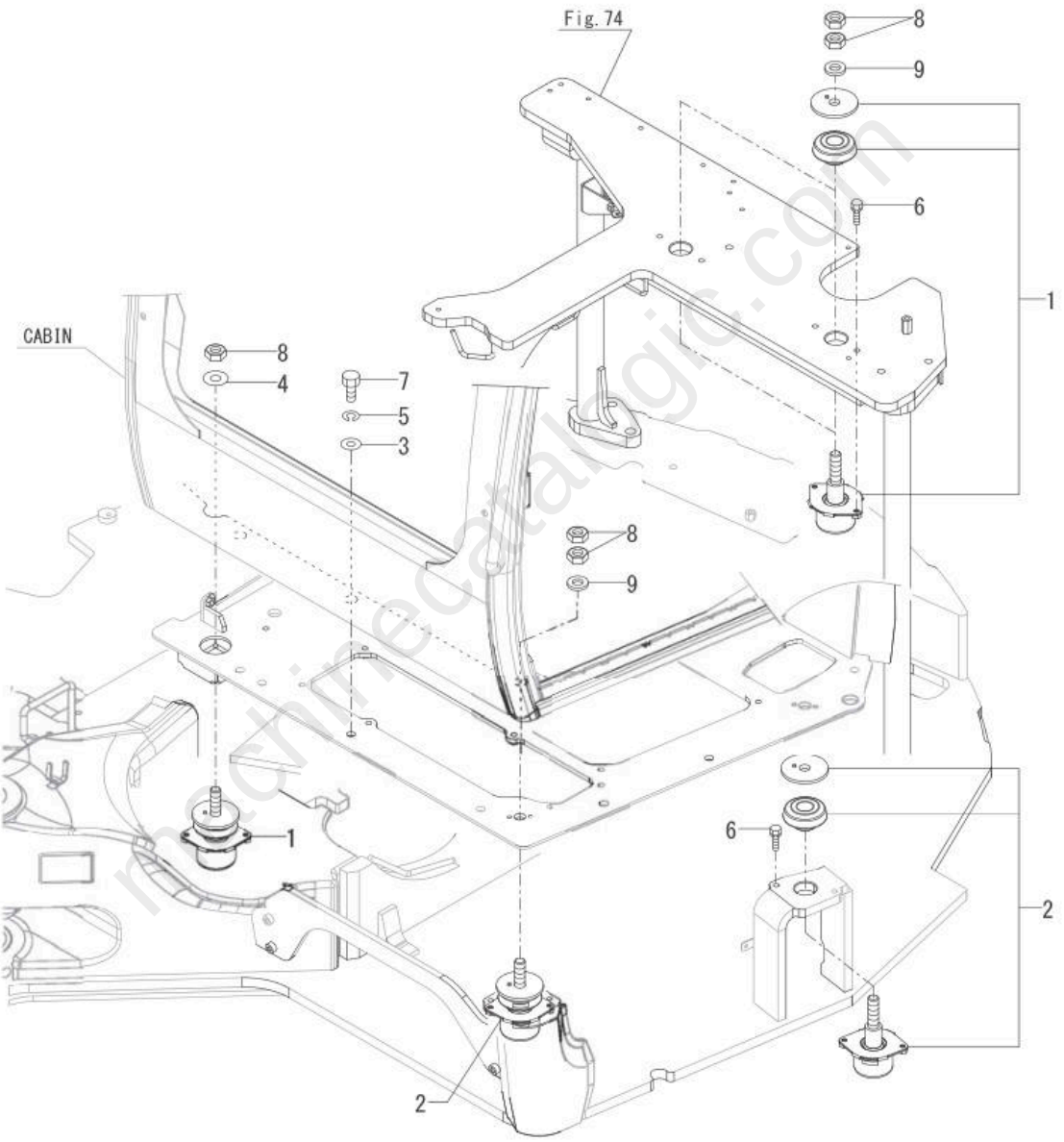

machinecatalogic.com

FIG. 95 - BUCKET CYLINDER

Ref. No.	Part No.	Description	Qty.
1	50293666	CYLINDER ASSY/BUCKET	1
2	50280795	BALL	1
3	50293427	SEAL/DUST	2
4	50293473	REPAIR KIT/CYLINDER	1
11	50293495	REPAIR KIT/CYLINDER	1
15	50293539	BUSHING	1
17	50293658	ROD KIT/PISTON	1
19	50293442	BUSHING	1
20	50293625	HEAD/CYLINDER	1
21	50293523	BUSHING	1
22	50293406	RING/SNAP	1
23	50293550	PISTON	1
24	50293484	TUBE	1
25	50293463	PLUG	1
26	50293308	CLAMP/TUBING	1
27	50293293	BOLT	1
28	50280872	SCREW,SET	1
29	50280873	SEAL,DUST	2
30	50282479	O-RING 1B P-26.0	2
31	50282497	NIPPLE PT1/8,GREASE	1
32	50282499	NIPPLE C,GREASE	1
33	50293396	CONNECTOR	1
34	50282610	PACKING, 24.0	1
35	50280898	CONNECTOR PF3/4M CMP	1
37	50282477	O-RING 1B P-24.0	1
38	50280814	CONNECTOR 1/2L	1
40	50282474	O-RING 1B P-18.0	1

machinecatalogic.com

FIG. 123 - PUMP & OIL COOLER (FITTING)

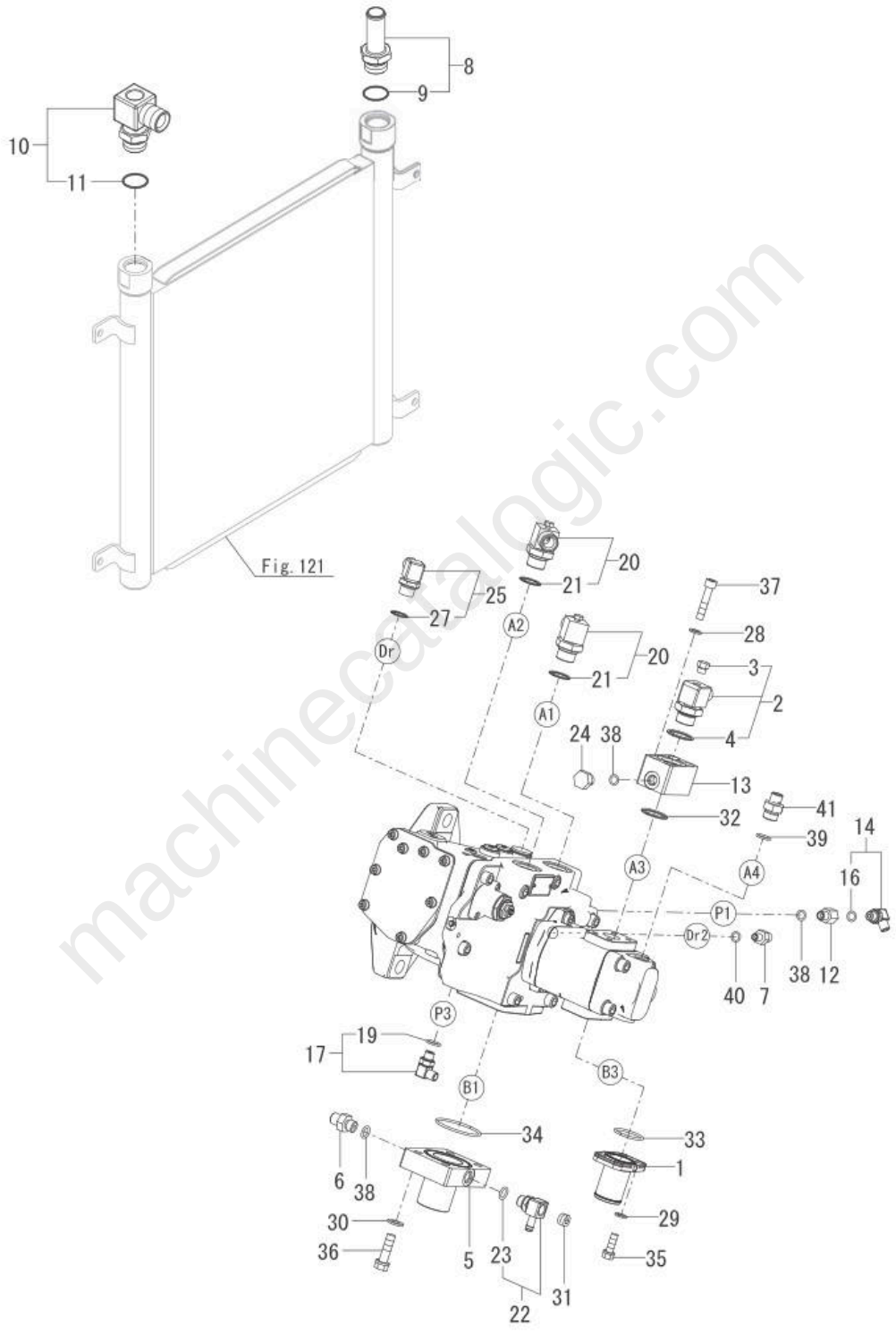

machinecatalogic.com

FIG. 146 - CONTROL PIPING (2-WAY VALVE - REMOTE CONTROL VALVE)

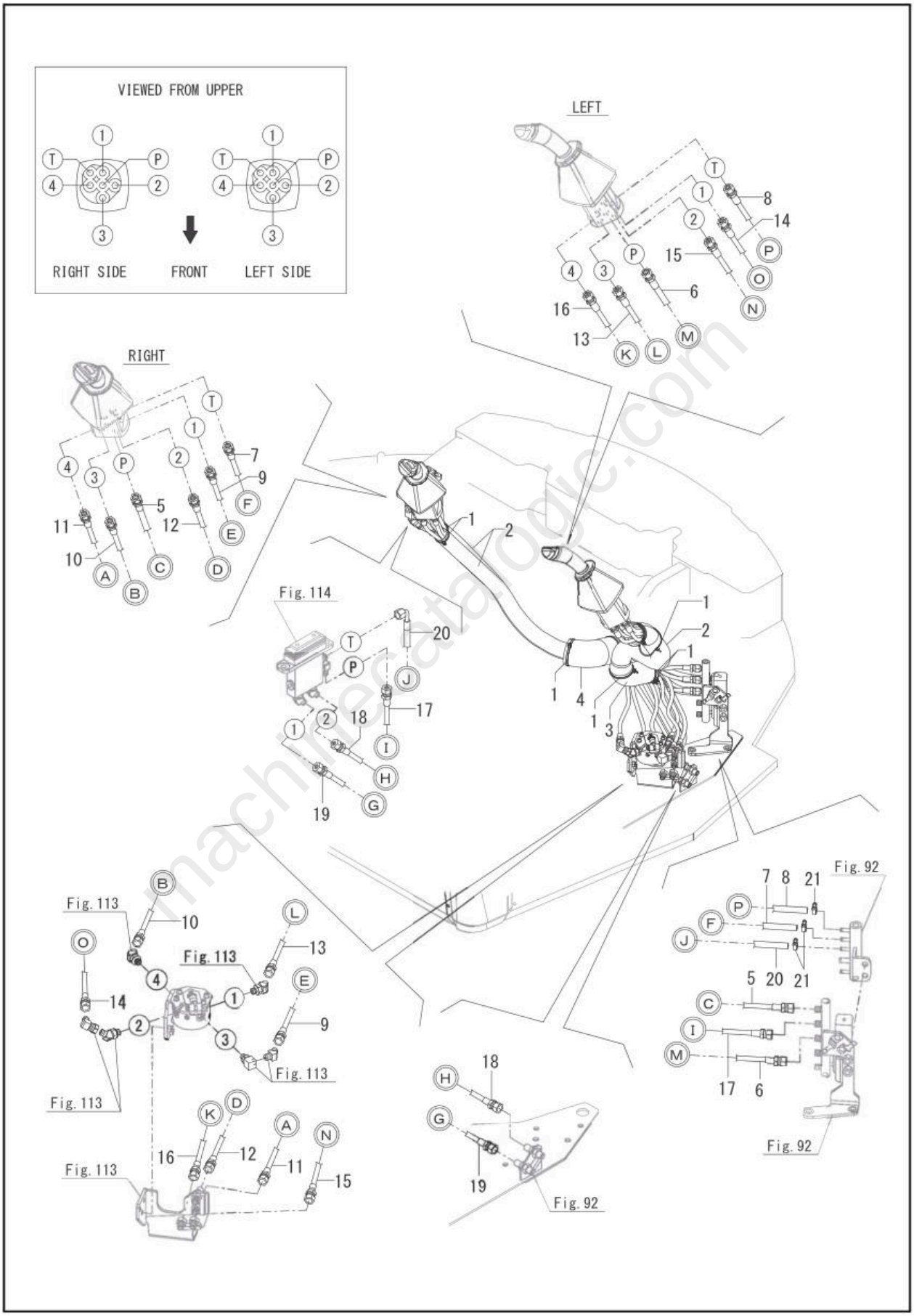

machinecatalogic.com

FIG. 161 - PLUG (IMPLEMENT)

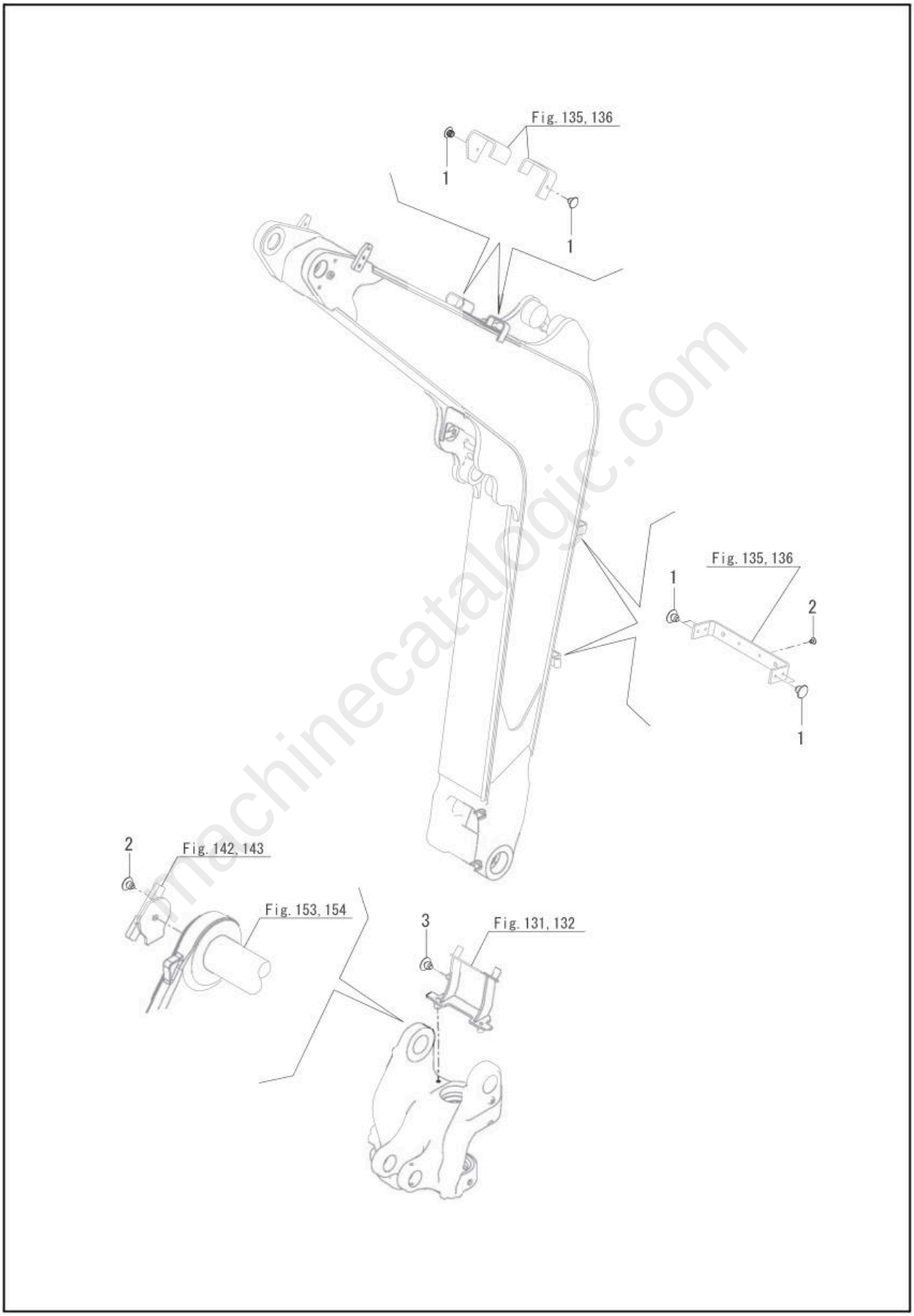

machinecatalogic.com

Full Version Available

Mustang 1000M Compact Excavator Parts Manual (50940499A)

Mustang 1000M compact excavator parts manual 50940499 Rev. A: engine, hydraulics, electrical, cab, undercarriage, decals. Instant PDF download.

VIEW THE FULL MANUAL

https://machinecatalogic.com/mustang-1000m-compact-excavator-parts-manual-50940499a/

Publication No.: 50940499 (Rev. A) · Language: English · Edition: August 2017