MANITOU
HANDLING YOUR WORLD

MUSTANG BY MANITOU

1050RT
1050RT (EU)
1050RT X-Series

Compact Track Loader
Parts Manual

50950437 Rev. E 2022/03

machinecatalogs.com

Mustang 1050RT Compact Track Loader Parts Manual (50950437E)

Document type: Parts Manual (illustrated parts catalogue with part numbers)

Brand: Mustang

Models: 1050RT

Machine: Compact Track Loader

Publication No.: 50950437 (Rev. E)

Edition date: March 2022

Language: English

Main contents

- 00-GENERAL INFORMATION AND SAFETY
- 05-SERVICE PARTS AND FILTERS
- 10-ENGINE
- 25-TRACK DRIVE
- 50-LIFT ARM
- 70-HYDRAULICS
- 80-ELECTRICAL
- 85-OPERATOR'S STATION
- 90-CHASSIS
- Appendix A:Pages Index
- Appendix B:Parts Index

machinecatalogic.com

Sample pages follow. Full manual: machinecatalogic.com

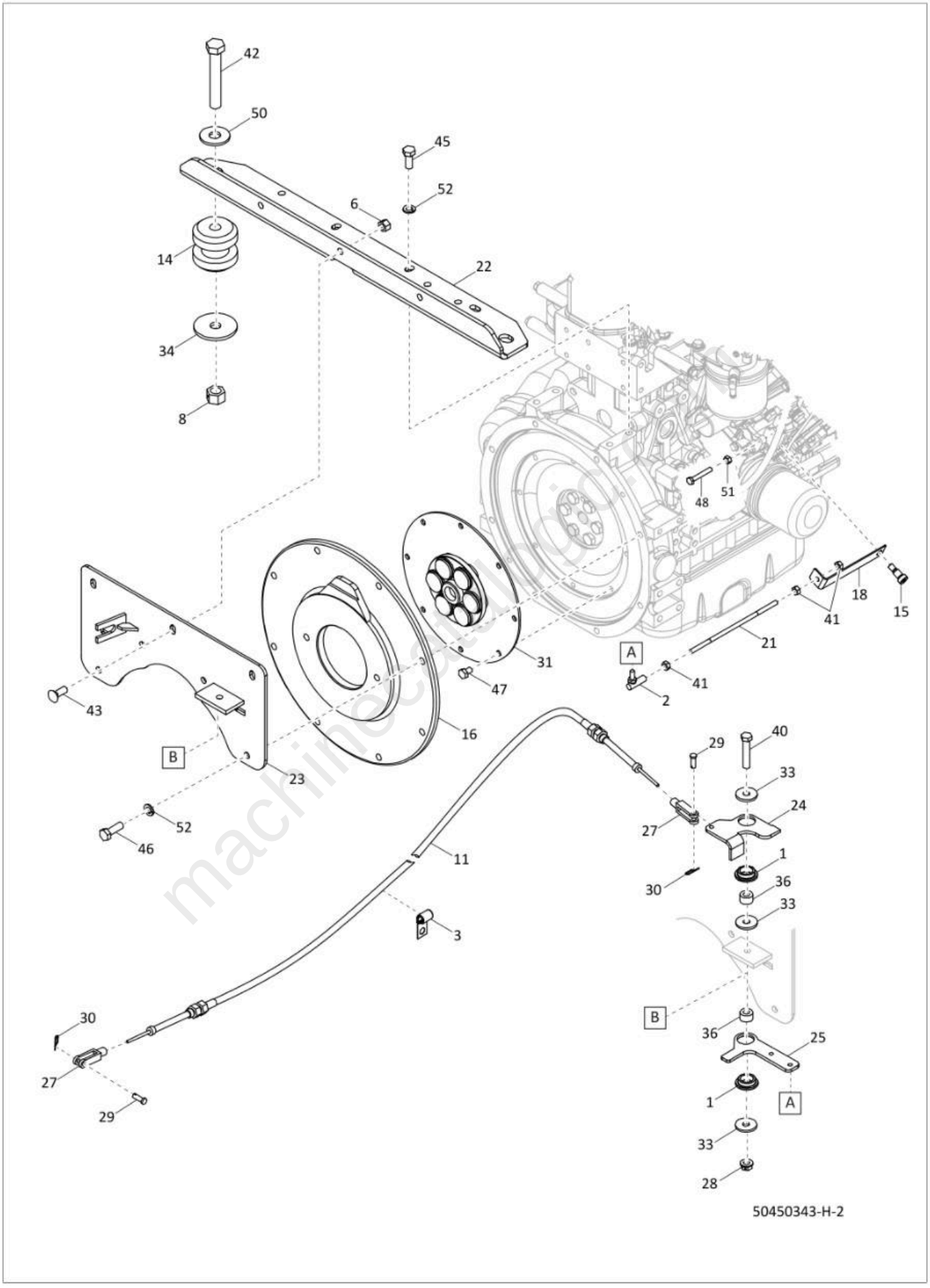

machinecatalogs.com

Item	Part No.	Name	Qty	Remarks
3	065415	90 MJ10-FJS10	1	
4	067761	90 MJ10-MAORB10	1	
6	072580	ST MJ10-MORB10	3	
10	076147	CLAMP/HOSE .50 x .41 HOLE	1	
20	133096	ST BLKHD MJ08-MJ08	1	
27	189976	Tube/Valve To Lift/Left	1	
34	210-19470	LN FL SERR 5/16 CZY	5	
35	390-15909	CLIP, HYDRAULIC LINE	3	
36	50313281	Tube/Auxiliary/Upper	1	
37	50313282	Tube/Auxiliary/Lower	1	
39	50318076	Tube/Hyd -10 Tilt Lower	1	
44	650781	CB 5/16x1-1/2 C5ZY	3	
45	651065	CB SN 5/16X1 C5ZY	1	

machinecatalogic.com

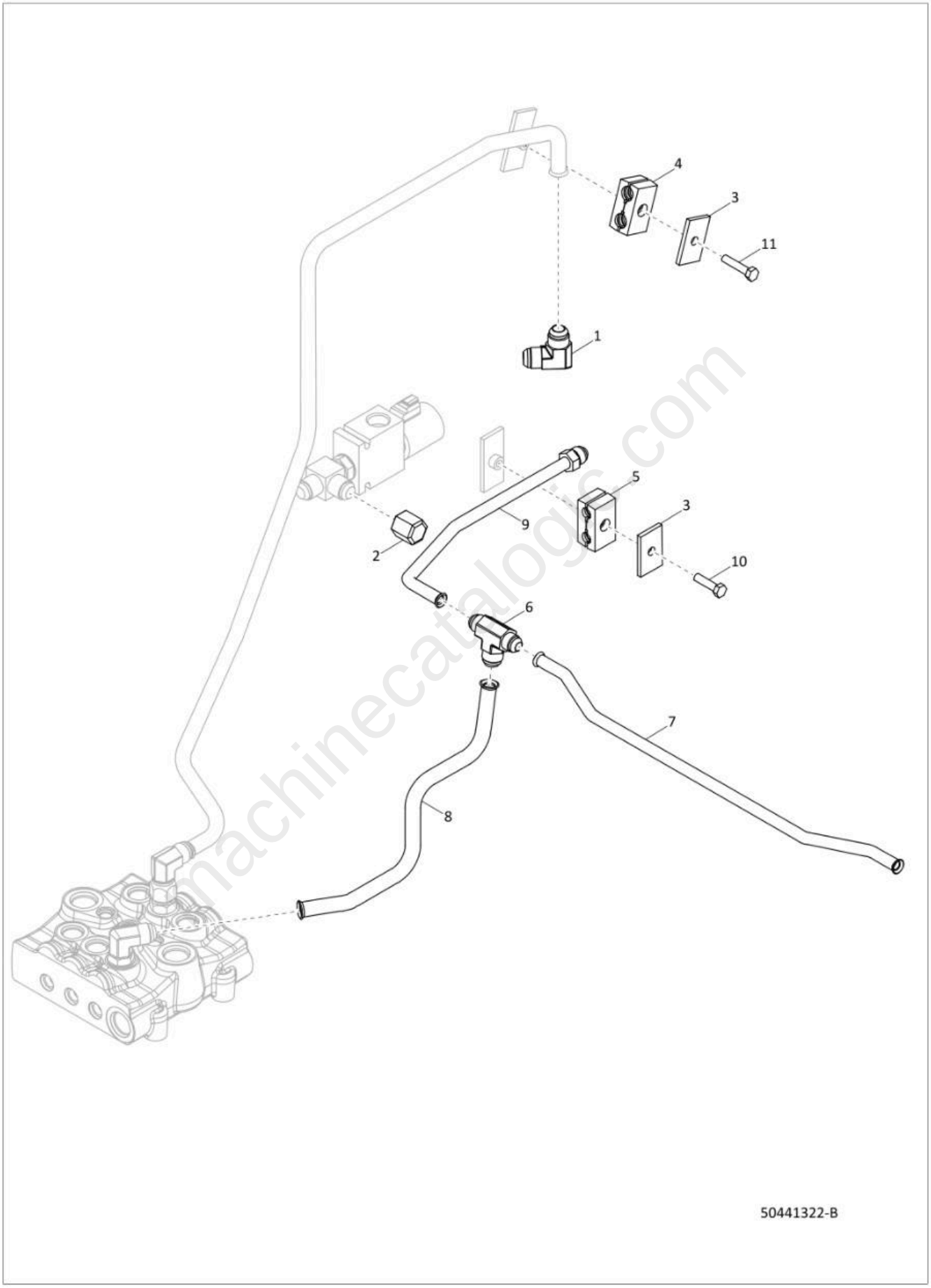

machinecatalogic.com

Item	Part No.	Name	Qty	Remarks
1	271958	VALVE/SELF LEVEL W/BYPASS	1	
2	NSS	PLUG ASSEMBLY	0	Includes O-ring
3	088471	SPRING	1	
4	088473	LOAD CHECK	1	
5	080808	PIN	1	
6	080809	CAP	1	
7	080811	SET SCREW	1	
8	080810	NUT	1	
9	420-34798	COVER, TAMPER PROOF	1	
10	080813	PLUG ASSEMBLY	2	Includes O-rings
11	50286966	FLOW DIVIDER SPOOL	1	
12	350-27299	RING	1	
13	380-32420	SPRING	1	
14	129004	PLUG ASSEMBLY	2	
15	50286967	UNLOADING SPOOL	1	
16	129066	SELF LEVELING SEAL KIT	1	
17	50280058	COIL	1	
18	50280059	CARTRIDGE	1	

machinecatalogic.com

Item	Part No.	Name	Qty	Remarks
1	055648	TIE/CABLE .19 x 7.50 BLACK	1	
2	058805	CLAMP/HOSE 1.12 x .41 HOLE	1	
3	064260	HLN INST 5/16 CZY	4	
4	064354	CS FL LOCK 5/16x1 C5ZY	1	
5	067750	NUT/SPEED	2	
6	070634	LN LG FL SERR 1/4 CZ	1	
11	136226	Clamp/Hose .75 x .41 Hole	1	
20	210-19469	LN FL SERR 1/4 CZY	3	
21	210-19470	LN FL SERR 5/16 CZY	1	
23	242147	RELAY/40 AMP/SEALED	3	
26	420-36329	Mount, Wire Tie	1	
28	50336988	MODUAL/CONTROL INTERLOCK	1	
29	50307076	Knob/Clamping .31 nut	2	
32	50315543	Wire Harness/Rops	1	
33	50319617	Mount/Cover Assy	1	
34	50319725	Cover Assy/Electrical	1	
36	650550	HN MS #1024 CZY	2	
37	650943	Screw/THM CR 1/4x1/2 C2ZY	2	
38	651640	BHSCS 5/16x3/4 C8 OCB	4	
39	651648	HWHTRS TAP/R 5/16x3/4 CZY	1	
70	50313841	Shield/Assembly	1	

machinecatalogic.com

Item	Part No.	Name	Qty	Remarks
5	045-31440	Bushing, Super Oilite	1	
9	054885	BALL/JOINT ASSY	1	
11	070856	LN LG FL SERR 3/8 CZ	2	
15	072916	CS FL LOCK 1/4x3/4 C5ZY	3	Early Series; used with floor mounted throttle pedal.
18	081380	CS FL LOCK 5/16x3/4 C5ZY	6	Some bolts are used to fill unused holes
21	121002	HLN INST 1/4 FZY	1	
33	191730	Cable/52"	1	
34	192051	Clevis/Short 1/4-28	1	
35	192081	Cable Mount/Weldment	1	
36	195138	THWH TR 3/8 x 3/4 COCG	4	
37	210-19469	LN FL SERR 1/4 CZY	3	Early Series; used with floor mounted throttle pedal.
38	210-19470	LN FL SERR 5/16 CZY	3	
41	220-16148	PIN, CLEVIS 1/4 X 3/4	1	
43	220-32680	PIN CLIP, RUE #8	1	
44	241745	Weldment/Auxiliary Pedal	1	
47	310-27919	Screw F/Whizlock 1/2-13nc X 2	1	
51	50302357	Foot Throttle/Electric	1	Early Series; floor mounted.
52	50313249	Weldment/Control Mount	1	
53	50320233	Plate/Filler	1	
54	50320259	Pan/Floor	1	
55	50320279	Channel/Debris	1	
56	50320296	Cover/Floor Cleanout	1	
57	50320336	Seal/Bulb	2	
58	50320566	Plate/Floor	1	Early Series; used with floor mounted throttle pedal.
59	50320717	Foam/Foot Plate/T-Bar	1	
60	50354062	HWHTFS 5/16x1/2 CZY	3	
61	50657036	HTB 5/16x1-1/2 C5ZY	1	
67	650704	CB 3/8x1 C5ZY	2	
70	651648	HWHTRS TAP/R 5/16x3/4 CZY	4	
80	330-33797	Cover, Clean Out Access	1	
90	50335652	Plate/Floor	1	Late Series; used with chassis mounted throttle pedal.
91	50333278	THROTTLE/FOOT	1	Late Series; chassis mounted.
92	651695	CS FL M8-1.25x25 8.8 ZY DIN6921	2	Late Series; used with chassis mounted throttle pedal.
93	50337724	Cover/Harness	1	
94	50337599	Cover/Foot Throttle	1	

machinecatalogic.com

Item	Part No.	Name	Qty	Remarks
1	137836	LN SER FL M8-1.25 C10 ZY DIN196	4	
2	184017	SEAT/STANDARD	1	
3	50354630	BRACKET/SEAT BELT	1	Includes items 6 and 7
4	650630	SCREW/CAP 7/16 X 1	2	
5	654046	WASHER/FLAT 7/16	2	
6	184034	SUSP/SWITCH/HARNESS	1	Included with item 2
7	184036	LATCHING/ ADJUSTMENT BAR	1	Included with item 2

machinecatalogic.com

010-32434 . . . . . 124, 126, 130, 132
010-32437 . . . . . 162, 164
010-32440 212
010-32441 . . . . . 212, 214
010-32442 . . . . . 126, 132
010-32443 . . . . . 126, 132
010-32444 . . . . . 124, 130
030-31905 208
030-31926 268
030-31942 . . . . . 220, 224
030-31960 208
030-31961 208
040-33432 . . . . . 184, 188, 190
040-33560 . . . . . 238, 244
040-33607 310
040-33608 310
040-33629 214
040-33727 114
040-33728 . . . . . 212, 214, 220, 224
040-33748 . . . . . 212, 214, 220, 224
040-33757 . . . . . 218, 228
040-33758 . . . . . 218, 228
040-33769 254
040-33772 246
040-33774 246
040-33775 246
040-33776 196
040-33783 246
0440-33629 . . . . . 221, 224
045-15773 164
045-31420 . . . . . 70, 162
045-31438 70
045-31440 216
045-31469 . . . . . 214, 220, 224, 226
045-31488 . . . . . 34, 212
045-31497 164
045-31499 . . . . . 218, 228
045-31500 . . . . . 208, 268
045-31501 270
047269 204
054202 . . . . . 212, 214, 220, 224
054626 . . . . . 92, 112, 116
054816 . . . . . 58, 62, 74, 80, 112, 116, 118
054820 88
054885 . . . . . 34, 216
054985 . . . . . 190, 192
054994 . . . . . 58, 60, 64, 108, 110
055335 . . . . . 46, 50, 54
055648 . . 28, 32, 108, 110, 172, 176, 178, 180, 182, 194, 196, 200, 204, 238, 244, 248, 250, 270, 272, 276, 284, 288
055898 . . . . . 124, 126
055925 200
055981 . . . . . 88, 110, 206
056086 . . . . . 94, 96
056937 212
057557 210
058615 . . . . . 34, 74, 80, 178, 182, 194, 198, 204
058805 . . . . . 46, 50, 54, 172, 176, 282
062023 . . . . . 36, 38, 46, 50, 54, 284, 288
062397 88
062756 72
064260 . . . . . 172, 176, 194, 290, 292, 294
064354 . . . . . 172, 176
064543 210
064669 . . . . . 46, 50, 54, 118
065415 . . . . . 74, 78, 80, 84, 104, 106, 118
066777 168
067750 . . . . . 172, 176, 198, 210
067761 . . . . 46, 50, 54, 74, 78, 80, 84, 86, 88, 98, 100, 102, 104, 104, 106
067823 208
067847 . . . . . 66, 184, 188, 190, 296, 298, 300, 302, 312
068034 . . . . . 72, 296, 298, 300, 302
068938 . . . . . 58, 64, 74, 80, 108, 110
070068 . . . . . 218, 228
070634 . . . . . 176, 208, 210, 236, 242, 268, 282, 290, 292, 294
070648 204
070856 . . 46, 50, 54, 75, 81, 86, 180, 212, 214, 216, 218, 220, 221, 224, 228, 246, 296, 298, 300, 302
071401 . . . . . 180, 184, 188, 220, 276
071700 . . . . . 38, 212
071701 . . . . . 184, 188, 190, 208, 236
071703 . 30, 34, 70, 114, 116, 118, 208, 212, 214, 218, 220, 224, 228, 268
071704 . . . . . 212, 214, 220, 224
071705 . . . . . 238, 244
071706 . . . . . 28, 32, 220, 284, 288
071709 . . . . . 30, 34
072340 174
072343 . . . . . 180, 284, 288
072490 208
072580 . . . . . 58, 60, 64, 74, 78, 80, 84, 98, 100, 102, 104, 106
072602 . . . . . 64, 74, 80, 86, 90, 98, 100, 102
072615 . . . . . 74, 90, 114
072806 88
072807 . . . . . 74, 80, 86, 104, 106
072853 6
072854 6
072871 . . . . . 218, 228
072916 . . . . . 204, 216, 240, 246
073458 . . . . . 6, 14
073687 204
074830 . . . . . 18, 20, 75, 81, 90, 98, 100, 102
075028 190
075236 . . . . . 94, 96
075858 . . . . . 284, 288
076143 . . . . . 56, 58, 62, 92
076147 . . . . . 74, 78, 80, 84, 86, 112
076587 . . . . . 184, 188
076588 . . . . . 28, 32, 46, 50, 54, 184, 188, 212, 220, 226
076589 . . . . . 42, 180, 204, 246
076681 196
076879 . . . . . 74, 80, 92
076880 118
076971 38
078151 196
079098 . . . . . 74, 80, 86, 94, 96

machinecatalogic.com

machinecatalogic.com

Full Version Available

Mustang 1050RT Compact Track Loader Parts Manual (50950437E)

Mustang 1050RT Compact Track Loader parts manual 50950437 Rev. E: engine, track drive, hydraulics, electrical, decals. Instant PDF download.

VIEW THE FULL MANUAL

https://machinecatalogic.com/mustang-1050rt-compact-track-loader-parts-manual-50950437e/

Publication No.: 50950437 (Rev. E) · Language: English · Edition: March 2022