MANITOU
HANDLING YOUR WORLD

MUSTANG BY MANITOU

1350R
1350R (EU)
1350R X-Series



Skid-Steer Loader

Parts Manual

50940343 Rev. E 04/19

Supersedes: 50940274

machinecatalogic.com

Mustang 1350R Skid Steer Loader Parts Manual (50940343E)

Document type: Parts Manual (illustrated parts catalogue with part numbers)

Brand: Mustang

Models: 1350R

Machine: Skid Steer Loader

Publication No.: 50940343 (Rev. E)

Edition date: April 2019

Language: English

Main contents

- Introduction
- Table of Contents
- Special Tools, Paint, Analysis Kits
- Chassis
- Lift Arm
- ROPS/FOPS
- Controls
- Engine
- Electrical
- Hydraulics
- Attachments
- Lift Kits
- Decals
- Fittings / O-Rings / Seal Rings
- Abbreviations and Descriptions for Fittings
- Schematics

machinecatalogic.com

Sample pages follow. Full manual: machinecatalogic.com

REAR WIPER - EARLY MACHINES (OPTION)

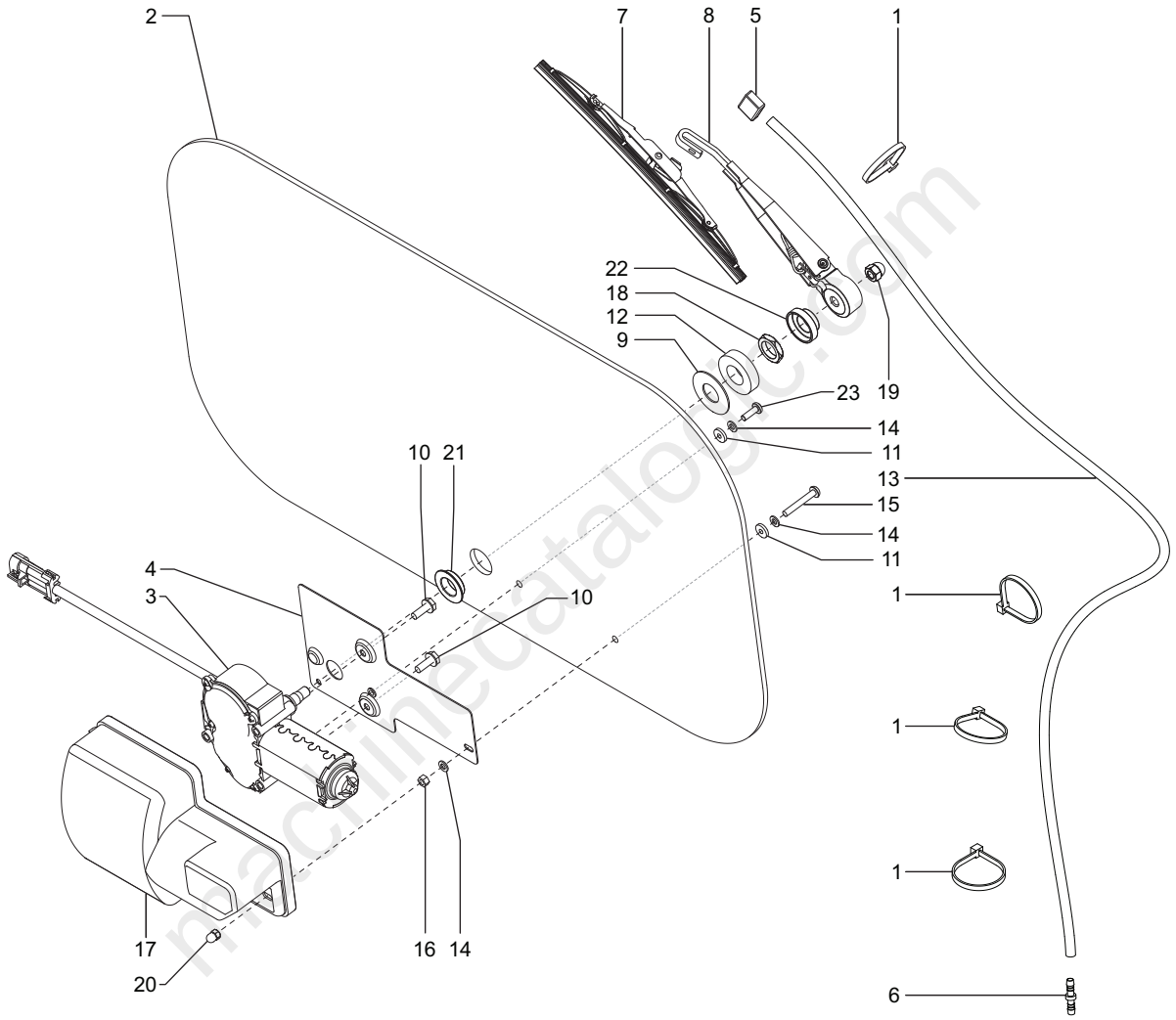

50440418

Ref. No.	Part No.	Description	Qty.
1	054626	ST MJ08-MORB08	2
2	055335	CLAMP/HOSE #20	4
3	062023	CLAMP/HOSE #04M	8
4	064260	HLN INST 5/16 CZY	1
5	064354	CS FL LOCK 5/16X1 C5ZY	3
6	067761	90 MJ10-MAORB10	1
7	067880	CLAMP/HOSE .50 X .41 HOLE DOUBLE	5
8	071246	LN INST M10-1.50 C9 ZY DIN6924	1
10	071703	LN CTR 3/8 CBZY	4
11	071706	LN 1/2 CBZY	1
12	071709	LN CTR 5/8 CBZY	2
13	072580	ST MJ10-MORB10	1
14	076589	CS FL LOCK 3/8X1 C5ZY	4
15	078931	CLAMP/MUFFLER 2.00	1
16	081377	CS FL LOCK 3/8X1-1/4 C5ZY	2
17	088442	90 MJ08-FJS08	1
18	136226	CLAMP/HOSE .75 X .41 HOLE	2
19	137063	ISOLATOR -11 RED-WHITE	2
20	176651	CS FL M6-1.00X12 8.8 ZY SP DIN6921	2
21	184560	CLAMP/HOSE .94 X .53 HOLE	1
22	184735	HOSE/FUEL	1
23	187474	HOSE-FUEL 5/16 X 15"	1
24	187581	CLAMP/HOSE #44 LINER	4
25	191735	VALVE/FUEL SHUT OFF 90	2
26	193971	MOUNT/FILTER	1
27	194068	ADAPTER/FILTER	1
	191651	O-RING 230 N70	1
28	210-19469	LN FL SERR 1/4 CZY	4
29	210-19470	LN FL SERR 5/16 CZY (SN 187558 and After)	12
	210-19470	LN FL SERR 5/16 CZY (SN 187557 and Before)	11
30	210-19533	LN FL CTR 3/8 CFZY	11
31	241459	ALT/LETRIKA/100AMP	1
32	241563	SPACER/ALTERNATOR	1
33	272300	FITTING/DIRT INDICATOR	1
34	400-21568	WASHER (PLATED)	4
35	400-30803	FW 17/32 ZY	1
36	420-35299	ENGINE MOUNT	1
37	50311742	BRKT/MTG WATER SEPARATOR (SN 187557 and Before)	1
38	50300752	PLATE/ENGINE SUPPORT	1
39	50300770	HOSE/RADIATOR UPPER	1
40	50310701	ENGINE MOUNT/BRACKET	1
41	50301367	HOSE/OIL -8 X 29IN	1
42	50301368	HOSE/OIL -10 X 29IN	1
43	50301733	SEAL/FOAM	1
44	50302121	COUPLER/FLEX 7.5 15 TOOTH	1
45	50302122	PLATE/PUMP MOUNT	1
47	50302513	HAND THROTTLE/MECHANICAL/ KONGSBERG	1
48	50302583	ASSY/DIPSTICK	1
49	50303113	PLATE/ALTERNATOR	1
50	50303476	BRACE/ENGINE TOP	1
51	50303738	HOSE/RADIATOR LOWER	1
52	50303747	HOSE/FUEL -05 X 51.5IN	2
53	50303807	MUFFLER/4TNV88	1
54	50303814	TUBE/EXHAUST	1
55	50303942	PLATE/THROTTLE CABLE	1
56	50308136	INTAKE RESONATOR	1
57	50308181	HOSE/INTAKE	1
58	50311208	HOSE/INTAKE	1
59	50308184	FAN/H1 16.88" DIA	1
60	50309138	MOUNT/MUFFLER	1
63	50309140	MOUNT/MUFFLER	1
66	50309214	BRKT/SHROUD	1
67	50309270	STRUT/RH	1
70	50309320	STRUT/LH/WLDMT	1
73	50309453	DOUBLER/3/8	1
74	50309465	BRACKET/V	1
77	50311589	WDMT/FAN SHROUD	1
82	50657066	FHSCS M8-1.25X25 C10.9 OCG DIN7991	2
83	650487	CS 5/16X1 C5ZY	3
84	650503	CS 1/2X2-1/2 C5ZY	1
85	650573	CB 5/16X1 C5ZY	5
86	650631	CS 5/8X4 C5ZY	2
87	650704	CB 3/8X1 C5ZY	7
88	071700	LN 1/4 CBZY	4
89	650784	CS 5/16X2-3/4 C5ZY	1
90	650786	CB 3/8X1-1/4 C5ZY	1
91	650810	FW 5/16 ANZY	2
92	651635	FHSCS 1/4X1-1/4 CZY	4
93	651662	CS M6-1.00X40 C8.8 ZY DIN931	1
94	651694	CS FL M6-1.00X25 8.8 ZY DIN6921 (apply Loctite 242 or equivalent)	4
95	654009	FW 1/2 AWZY	1
96	654012	FW 5/8 AWZY	2
97	654024	LW 5/16 RZY	4
98	656007	CS M10-1.5X25 C8.8 ZY DIN933	8
99	656008	CS M10-1.5X30 C8.8 ZY DIN933	8
100	656009	CS M10-1.5X35 C8.8 ZY DIN933	4
101	656047	HN M6-1 C8 ZY DIN934	1
102	656048	HN M8-1.25 C8 ZY DIN934	4
103	656093	CS M8-1.25X16 C8.8 ZY DIN933	8
104	656094	CS M8-1.25X30 C8.8 ZY DIN933	1
105	656103	LW M10 ZY DIN127	20
106	656105	CS M8-1.25X25 C8.8 ZY DIN933	8
107	656154	CS M8-1.25X45 C8.8 ZY DIN931	1
108	656173	CS M10-1.5X130 C8.8 ZY DIN931	1
109	272299	INDICATOR/SERVICE	1
110	50311833	BRACKET/DIP STICK	1
111	195568	CARTRIDGE/FILTER/ENGINE OIL	1
112	50303241	ENG/035KW/YAN/4TNV88-BKMSR2/ IT4XPT	1
113	081379	CS FL LOCK 5/16X1/2 C5ZY (SN 187558 and After)	1
	081379	CS FL LOCK 5/16X1/2 C5ZY (SN 187557 and Before)	2
114	50313621	SEPARATOR/FUEL BRKT (SN 193797 and After)	1
115	650758	CB 1/4X3/4 C5ZY (SN 187558 and After)	2

marinecatalogs.com

ROAD LIGHTS (OPTION)

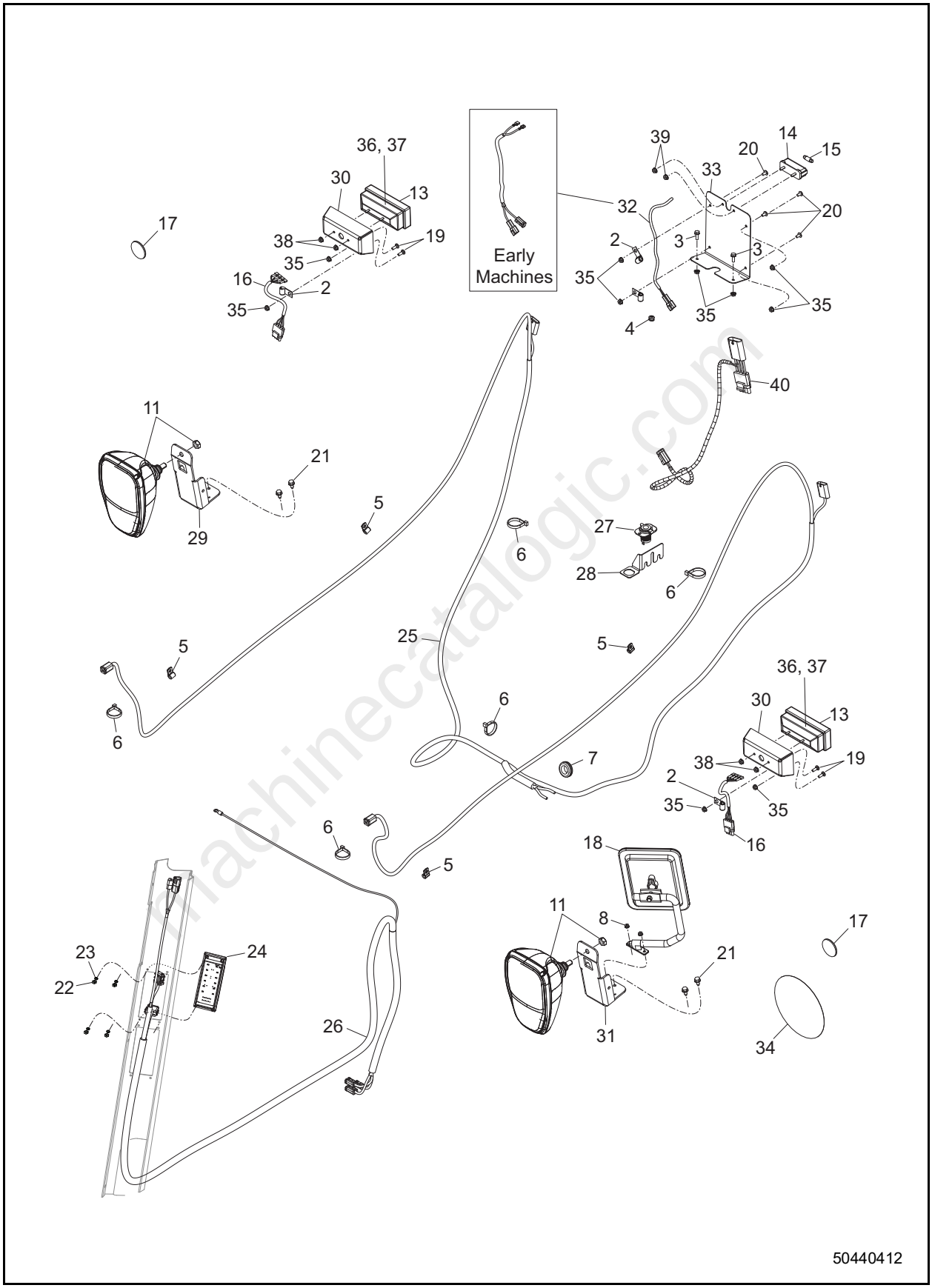

machinecatalogic.com

Part No.	Page No.	Ref. No.
50657047	47	31
50657047	49	34
50657047	53	75
50657047	55	75
50657049	143	45
50657063	43	16
50657066	89	82
50657066	91	82
50657070	37	27
50657071	47	32
50657071	49	41
50657071	53	76
50657071	55	76
50657073	59	8
50657073	61	8
50657090	59	10
50657090	61	10
51203017	1	26
51203018	1	25
010-32434	133	10
010-32434	137	11
010-32435	135	12
010-32436	133	13
010-32436	137	13
030-20745	19	17
030-20745	21	5
030-20745	23	5
030-31926	63	1
030-31926	175	1
045-31420	25	14
045-31469	81	1
045-31469	83	1
045-31500	63	2
090-30303	81	9
090-30303	83	9
100-32172	137	3
130-32234	133	1
130-32234	137	1
140-32269	135	11
160-32903	133	5
160-32903	137	6
160-32904	135	1
160-32936	133	8
160-32936	137	9
170-34709	149	14
170-34981	135	5
170-35039	149	15
170-35071	63	7
190-32915	133	4
190-32915	137	5
190-32916	133	9
190-32916	135	4
190-32916	137	10
200-32287	81	18
200-32287	83	18
210-19469	13	12
210-19469	47	7
210-19469	53	22
210-19469	55	22
210-19469	77	2
210-19469	79	3
210-19469	85	27
210-19469	87	27
210-19469	89	28
210-19469	91	28
210-19469	121	35
210-19469	127	4
210-19469	143	25
210-19470	3	8
210-19470	5	6
210-19470	13	13
210-19470	39	2
210-19470	41	2
210-19470	47	8
210-19470	49	8
210-19470	53	23
210-19470	55	23
210-19470	67	3
210-19470	81	19
210-19470	83	19
210-19470	85	28
210-19470	87	28
210-19470	89	29
210-19470	89	29
210-19470	91	29
210-19470	93	3
210-19470	95	3
210-19470	99	8
210-19470	103	7
210-19470	141	6
210-19470	143	26
210-19470	171	6
210-19532	125	6
210-19532	181	6
210-19532	183	1
210-19533	9	2
210-19533	13	14
210-19533	73	17
210-19533	75	17
210-19533	81	20
210-19533	83	20
210-19533	85	29
210-19533	85	29
210-19533	87	29
210-19533	89	30
210-19533	91	30
210-20746	19	1
210-20746	21	8
210-20746	23	6
210-31017	35	5
210-31017	73	18
210-31017	75	18
210-31017	81	21
210-31017	83	21
210-31017	85	30
210-31017	87	30
220-16148	81	14
220-28739	73	19
220-28739	75	19
220-32536	13	15

machinerylogic.com

Full Version Available

Mustang 1350R Skid Steer Loader Parts Manual (50940343E)

Mustang 1350R skid steer loader parts manual 50940343 Rev. E: engine, hydraulics, chassis, ROPS/FOPS, HVAC, decals by serial number. Instant PDF download.

VIEW THE FULL MANUAL

https://machinecatalogic.com/mustang-1350r-skid-steer-loader-parts-manual-50940343e/

Publication No.: 50940343 (Rev. E) · Language: English · Edition: April 2019