MANITOU
HANDLING YOUR WORLD

MUSTANG
BY MANITOU

1350RT
1350RT (EU)
1350RT X-Series

Compact Track Loader
Parts Manual

50950469 Rev.C 2022/03

machinecatalogs.com

Mustang 1350RT Compact Track Loader Parts Manual (50950469C)

Document type: Parts Manual (illustrated parts catalogue with part numbers)

Brand: Mustang

Models: 1350RT

Machine: Compact Track Loader

Publication No.: 50950469 (Rev. C)

Edition date: March 2022

Language: English

Main contents

- 00-GENERAL INFORMATION AND SAFETY
- 05-SERVICE PARTS AND FILTERS
- 10-ENGINE
- 25-DRIVETRAIN
- 40-CONTROLS
- 50-LIFT ARM
- 70-HYDRAULICS
- 80-ELECTRICAL
- 85-CAB
- 90-CHASSIS
- Appendix A:Pages Index
- Appendix B:Parts Index

machinecatalogic.com

Sample pages follow. Full manual: machinecatalogic.com

Item	Part No.	Name	Qty	Remarks
1	50323563	Decal/Right Tower/1350RT	1	
2	50323561	Decal/Left Tower/1350RT	1	
3	50323533	DECAL/MANITOU/30.00 IN	2	
4	50324910	DECAL/MANITOU/SILVER 9 IN	1	
5	50324911	Decal/Manitou/Reflective 9 In	2	
6	50302120	Decal/IdealTrax	2	
7	137637	Decal/Danger Lift Arm	1	Domestic
8	137661	Decal/Tie Down	2	
9	137718	Decal/Lift Hook	4	When equipped with optional lift kit
10	137545	Decal/Reflector Red	2	Domestic
11	184214	Decal/Warning ROPS	1	Domestic (located under ROPS/FOPS)
12	184711	Decal/Warning ROPS EU	1	EU/ROW (located under ROPS/FOPS)
13	137848	Decal/Danger Lift Arm	1	EU/ROW
14	130309	Decal/Warning Tipping	2	When equipped with optional counterweight
15	138711	Decal/Hydraglide	2	
16	197998	Reflector/Red	2	EU/ROW
17	139074	DECAL/AIR CONDITIONER	2	

machinecatalogic.com

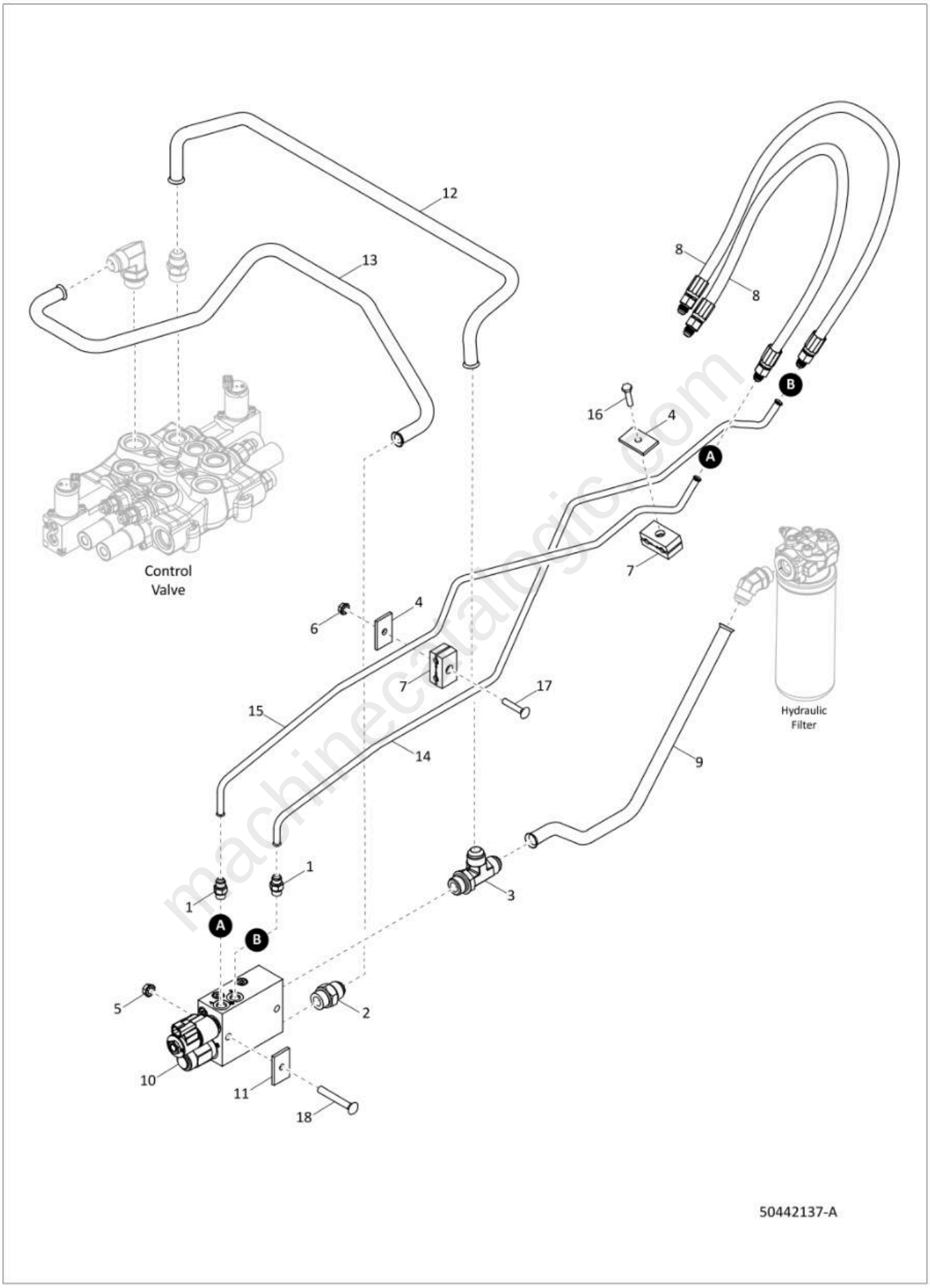

machinecatalogs.com

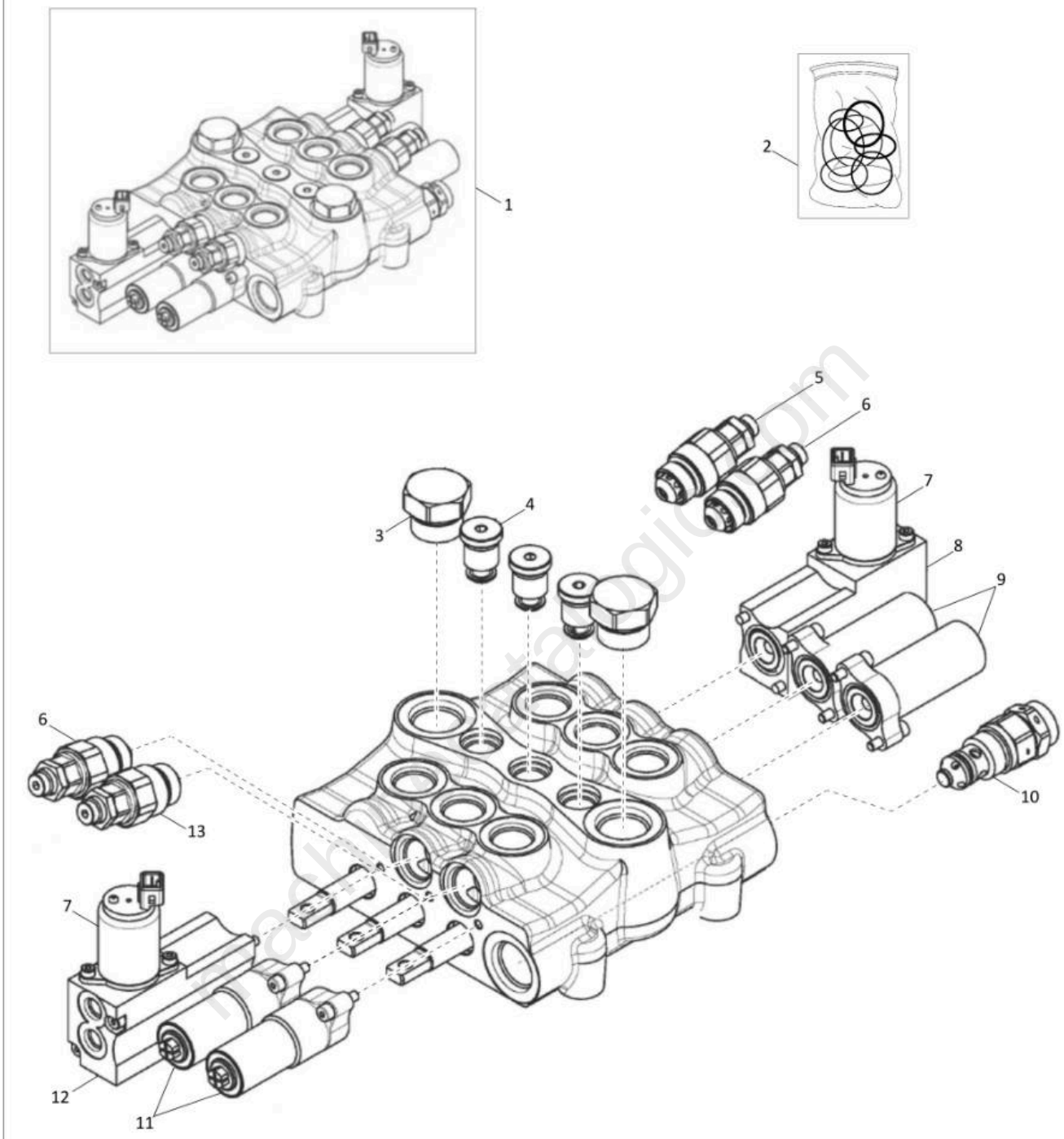
1
2
3
4
5
6
7
8
9
10
11
12
13
50324645-A

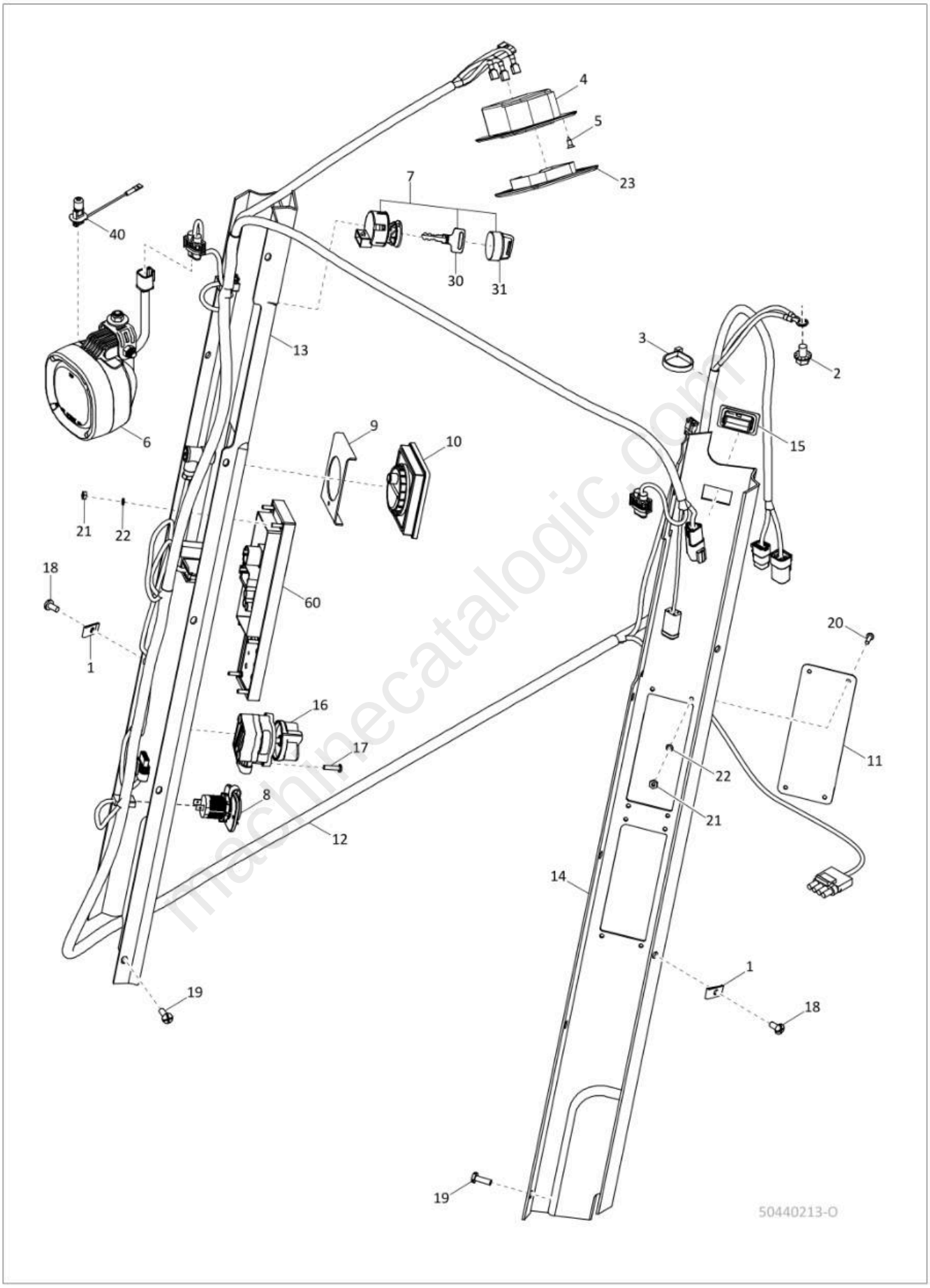

machinecatalogic.com

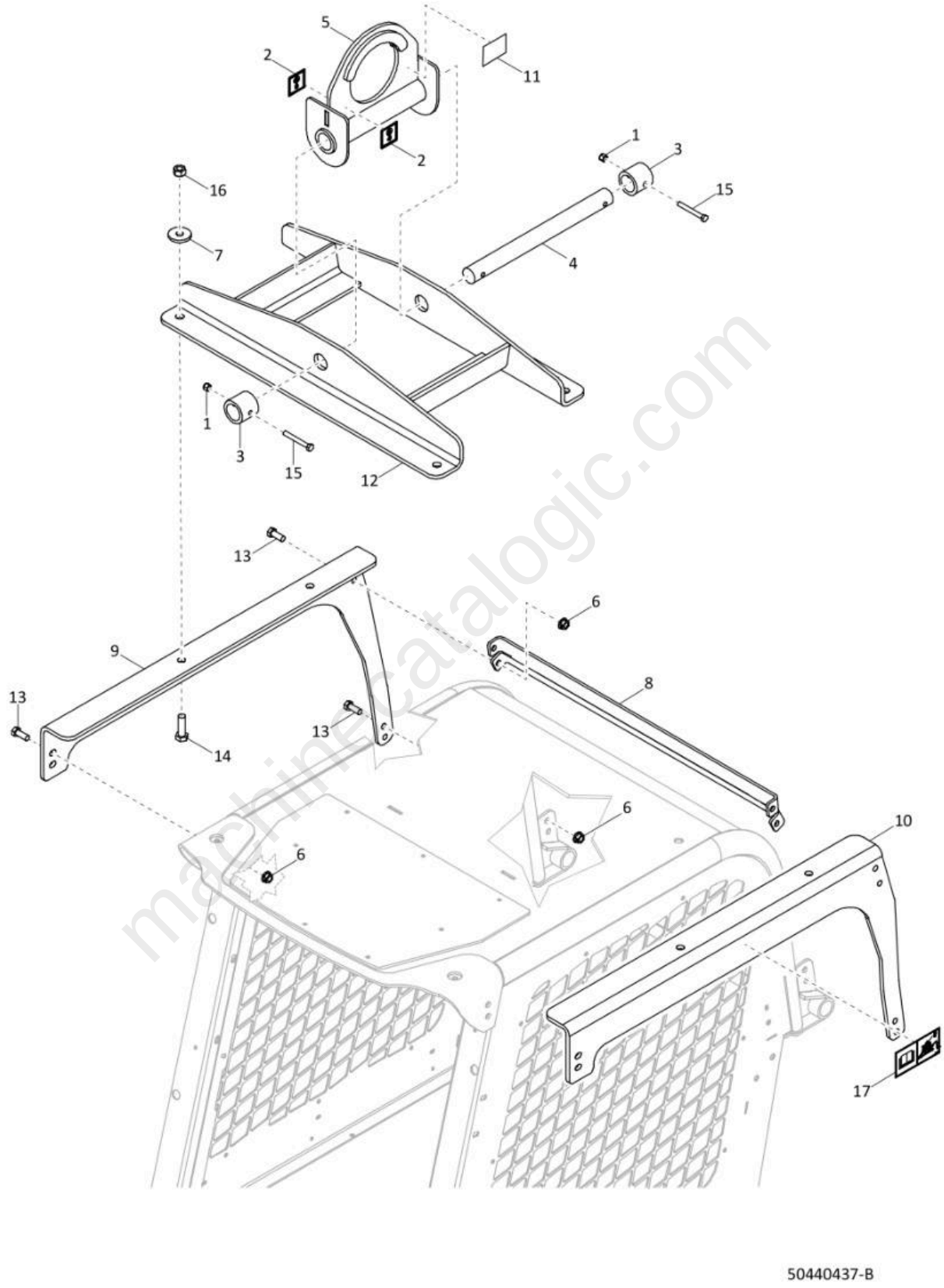

machinecatalogic.com

242985 . . . . . 204, 212
242986 . . . . . 204, 212
243009 . . . . . 32, 68, 70
243249 136
243270 194
243450 216
243452 216
243955 236
243956 236
243958 236
243959 236
243960 236
243961 236
243962 236
243963 236
243964 236
243965 236
243966 236
244272 136
244955 42
245055 254
245180 94
252590 6
270979 18
271020 . . . . . 54, 60
271468 264
271958 . . . . . 108, 126
272299 . . . . . 44, 46
272300 . . . . . 32, 44
272426 264
272452 . . . . . 98, 124
272578 158
272669 118
272723 174
272816 20
272817 20
272818 20
272819 20
272820 20
272867 120
272913 54
272950 50
273471 120
273773 122
274602 54
275574 . . . . . 54, 58
310-29166 38
310-32288 178
310-32616 . . . . . 120, 162, 164, 166, 168
350-27299 126
380-32420 126
390-15909 . . . . . 92, 114, 116
400-30803 . . . . . 28, 30
400-32468 88
400-32526 240
420-29434 48
420-34798 126
420-34912 24
420-34913 24
420-34914 24
420-35066 . . . . . 8, 16
420-35299 . . . . . 28, 30
420-35509 . . . . . 170, 172
420-36086 238
420-36087 238
420-36132 192
420-36151 . . . . . 200, 208
425-36233 50
480-27676 196
50220964 138
50221260 18
50221287 18
50221289 . . . . . 224, 228
50250365 18
50250577 . . . . . 130, 138
50250578 . . . . . 248, 258
50250579 . . . . . 248, 258
50250580 248
50250581 . . . . . 248, 258
50250582 . . . . . 248, 258
50250583 258
50250584 258
50280058 126
50280059 126
50280154 60
50280155 . . . . . 58, 60, 62
50280156 . . . . . 60, 62
50280157 . . . . . 60, 62
50280158 . . . . . 60, 62
50280159 . . . . . 60, 62
50280160 . . . . . 58, 60, 62
50280161 58
50280163 58
50280176 140
50280185 140
50280186 . . . . . 158, 204, 212, 264
50280187 158
50280195 130
50280403 130
50280404 130
50280405 130
50286966 126
50286967 126
50286969 142
50287022 24
50287438 152
50287439 152
50287441 152
50287442 152
50288064 18
50288132 . . . . . 148, 150
50288133 146
50288134 . . . . . 148, 150
50288135 146

machinecatalogic.com

machinecatalogic.com

Full Version Available

Mustang 1350RT Compact Track Loader Parts Manual (50950469C)

Mustang 1350RT compact track loader parts manual, 50950469 Rev. C: engine, drivetrain, hydraulics, electrical, cab, decals. Instant PDF download.

VIEW THE FULL MANUAL

https://machinecatalogic.com/mustang-1350rt-compact-track-loader-parts-manual-50950469c/

Publication No.: 50950469 (Rev. C) · Language: English · Edition: March 2022