MUSTANG BY MANITOU

1500R NXT2
1500R NXT2 (EU)
1500R NXT2 X-SERIES

Compact Skid Loader

Part's Manual

50950516 Rev. A 04/20



machinecatalogic.com

Mustang 1500R NXT2 Skid Steer Loader Parts Manual (50950516A)

Document type: Parts Manual (illustrated parts catalogue with part numbers)

Brand: Mustang

Models: 1500R NXT2

Machine: Skid Steer Loader

Publication No.: 50950516 (Rev. A)

Edition date: April 2020

Language: English

Main contents

- SERVICE PARTS AND FILTERS
- DECALS
- CAB
- CONTROLS
- CHASSIS
- LIFT ARM
- ENGINE
- HYDRAULICS
- ELECTRICAL
- DRIVETRAIN
- Appendix A:Pages Index
- Appendix B:Parts Index

machinecatalogic.com

Sample pages follow. Full manual: machinecatalogic.com

Item	Part No.	Name	Qty	Remarks
1	50303715	HOSE/HEATER INTAKE	1	
2	50303713	FILTER/FRESH AIR HEATER	1	
3	50303774	Grille/Heater Recirc	1	
4	50303773	FILTER/HEATER RECIRC	1	
5	50311399	Hose Elbow/Heater 1.75 x 1.75	1	
6	50311002	HVAC Housing	1	Includes items 7-15
7	50250578	HVAC Blower Assy	1	
8	650548	RHMS SLT #1024x1/2 CZY	8	
9	50250582	Harness/HVAC Housing	1	
10	50250581	Grommet .50ID X .062GW X 1.25GD	1	
11	50250579	Screw/HWHSM #8X1/2 Z	21	
12	50250583	Grommet .187ID X .047GW X .312GD	1	
13	50250584	HVAC Combination Core Assy	1	
14	138623	SWITCH/PRESET COLD CONTROL	1	
15	50294188	Expansion Valve	1	

machinecatalogic.com

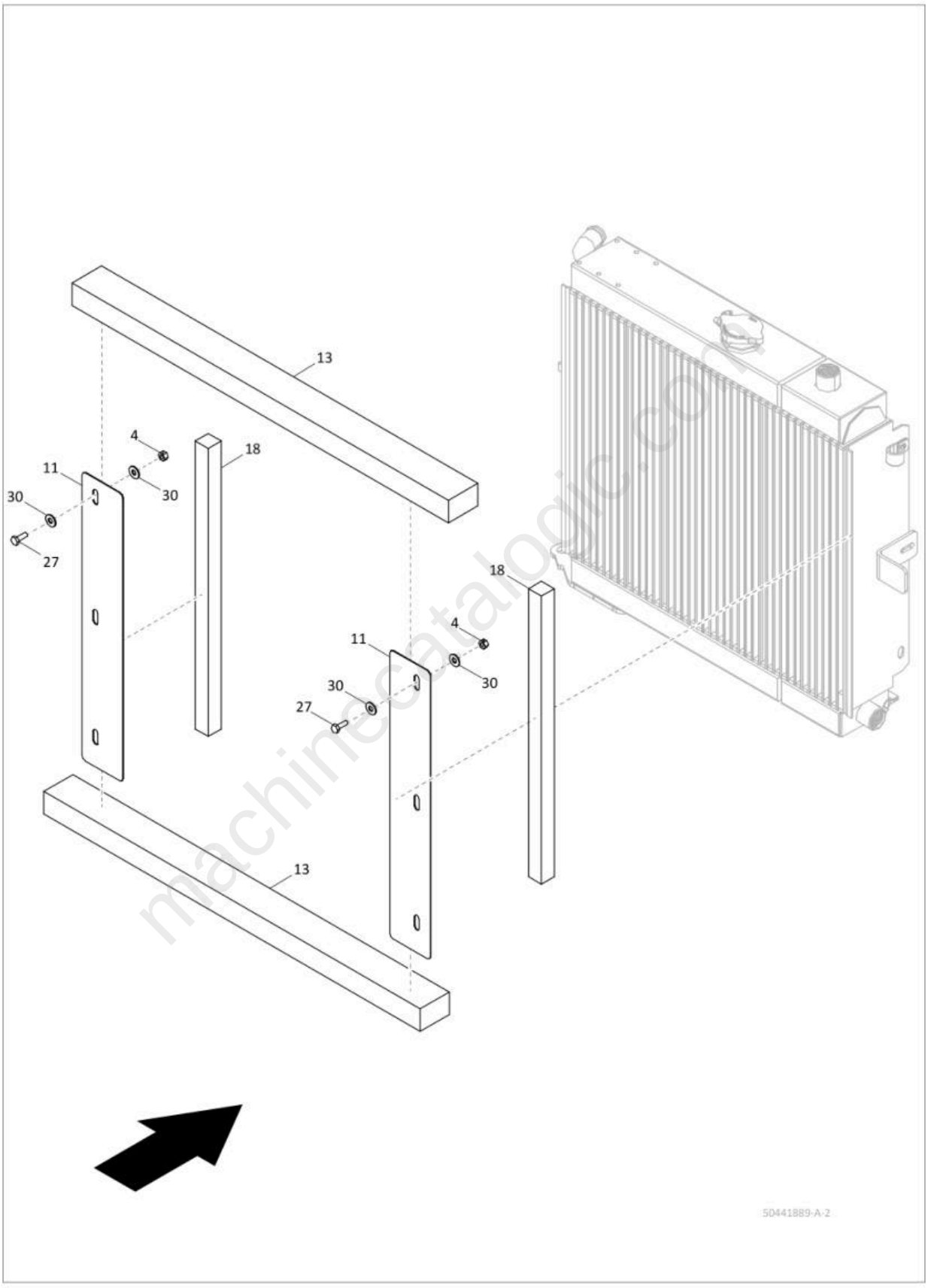

machinecatalogic.com

Item	Part No.	Name	Qty	Remarks
1	067750	NUT/SPEED	4	
2	076588	CS FL LOCK 3/8X3/4 C5ZY	1	
3	088467	TIE/CABLE .30 X 14.50 BLACK	4	
4	137497	LIGHT/DOME	1	
5	195110	SCREW /#8 x .5 SM/PHIL FH	2	
6	241117	LIGHT / WHITE / 55W	2	
7	272578	SWITCH/IGNITION	1	
8	50303163	Socket/12v	1	
9	50303526	PLATE/DISPLAY MOUNT	1	
10	50303602	DISPLAY/PROGRAMMED	1	
11	50303711	COVER/OPTION CUTOUT/A-PILLAR	1	
12	50307099	HARNESS/CAB	1	
13	50316392	PANEL/CONTROL RH	1	
14	50319718	PANEL/CONTROL/MIC/LH	1	
15	50319735	MIC/DUMMY COVER	1	
16	50351312	THROTTLE	1	
17	50657022	BHSCS #1032x3/4 C8 OCG	2	
18	651307	PHMS CR 1/4x1/2 OCB	4	
19	651308	PHMS CR 1/4x3/4 OCB	10	
20	651778	PHMS CR #8-32x3/4 CZB	4	
21	653002	HN MS #832 CZY	10	
22	654035	LW #8 RZY	10	
30	50280186	KEY/8001 (14603)	1	
31	50280187	KEY COVER/RUBBER/8001 (14603)	1	
40	139529	Light Bulb Replace 55W	1	
50	NSS	BULB/5.0 W/T3-1/4	1	
60	50317466	MODULE/MAIN KEYPAD/P	1	

machinecatalogic.com

Full Version Available

Mustang 1500R NXT2 Skid Steer Loader Parts Manual (50950516A)

Mustang 1500R NXT2 skid steer loader parts manual, 50950516 Rev. A. Engine, hydraulics, cab, controls, chassis, decals. Instant PDF download.

VIEW THE FULL MANUAL

https://machinecatalogic.com/mustang-1500r-nxt2-skid-steer-loader-parts-manual-50950516a/

Publication No.: 50950516 (Rev. A) · Language: English · Edition: April 2020