MANITOU
HANDLING YOUR WORLD

MUSTANG BY MANITOU

1650R
1650R (EU)
1650R X-Series



Skid-Steer Loader

Parts Manual

50940345 Rev. E 04/19

Supersedes: 50940276

machinecatalogic.com

Mustang 1650R Skid Steer Loader Parts Manual (50940345E)

Document type: Parts Manual (illustrated parts catalogue with part numbers)

Brand: Mustang

Models: 1650R

Machine: Skid Steer Loader

Publication No.: 50940345 (Rev. E)

Edition date: April 2019

Language: English

Main contents

- Introduction
- Table of Contents
- Special Tools, Paint, Analysis Kits
- Chassis
- Lift Arm
- ROPS/FOPS
- Controls
- Engine
- Electrical
- Hydraulics
- Attachments
- Lift Kits
- Decals
- Fittings / O-Rings / Seal Rings
- Abbreviations and Descriptions for Fittings
- Schematics

machinecatalogic.com

Sample pages follow. Full manual: machinecatalogic.com

Ref. No.	Part No.	Description	Qty.
1	087849	CLAMP/HOSE #52	1
2	192848	SOUND DIFFUSER	1
3	50303482	PAD/RISER R165 RH	1
4	50303485	PAD/RISER R165 LH	1
5	50303599	FOAM/ENGINE COVER 150/165	1
6	N/A	FOAM/COOLER R165 (part was supplied on a limited number of machines)	2
7	50314970	WDMT/LOUVER	1
10	50304012	WDMT/LOUVERED INTAKE	1
13	50304056	FOAM/REAR DOOR	1
14	50350776	BHSCS TR TRILOBE TRX 5/16X3/4 C8OCG	2

machinecatalogic.com

Ref. No.	Part No.	Description	Qty.
1	081371	HN FL T-LOCK 7/16 FFZY (standard seat-no suspension)	3
	081371	HN FL T-LOCK 7/16 FFZY (seat with mechanical or air suspension)	1
2	184007	TAB-RETRACTOR MOUNT	1
3	420-36086	SEAT BELT ASSY - 2 INCH	1
	420-36087	SEAT BELT ASSY - 3 INCH	1
4	650630	CS 7/16X1 F5ZY	3
5	654046	FW 7/16 AWZY	3

machinecatalogic.com

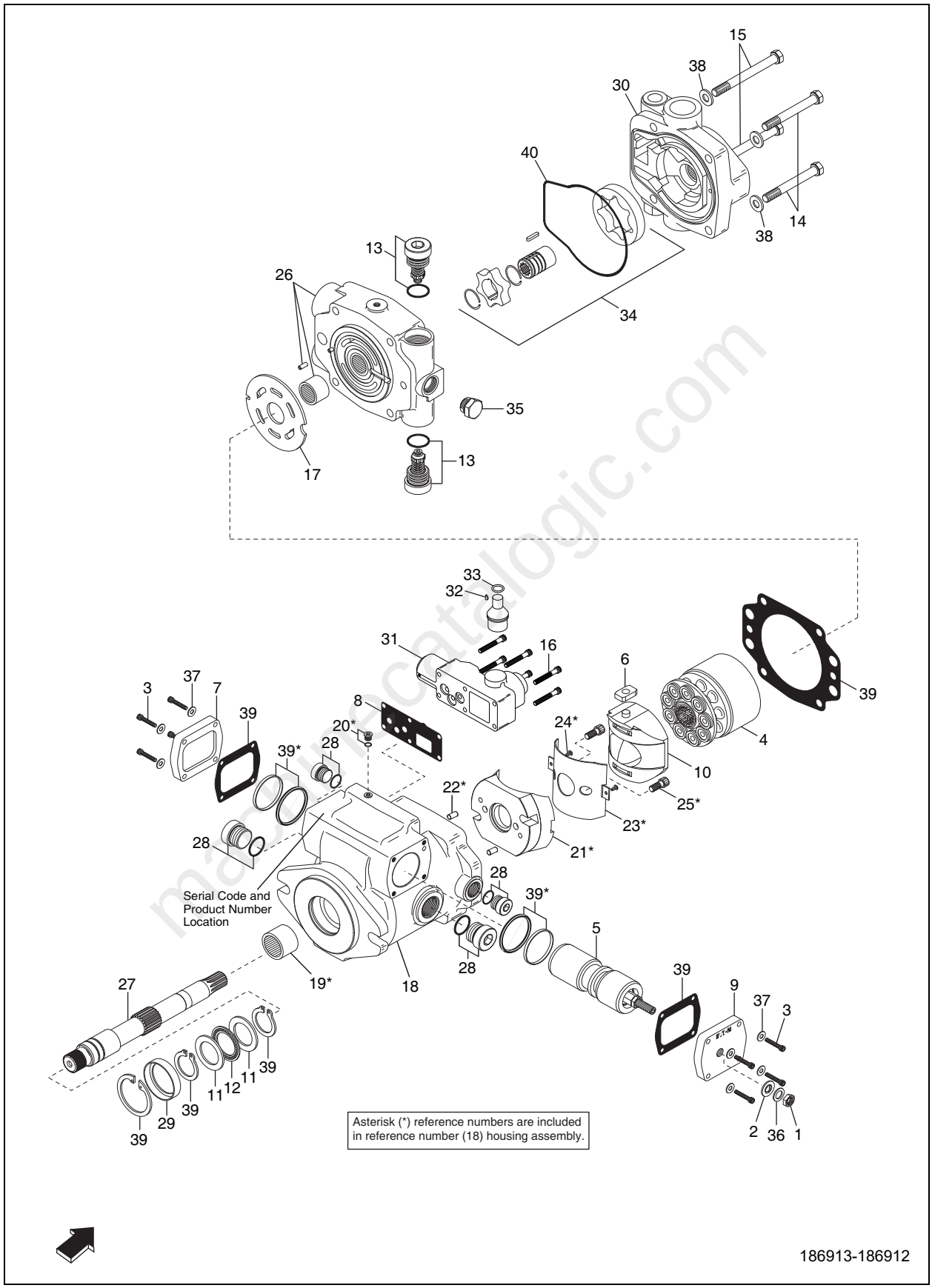

manualcatalogic.com

GEAR PUMP, HI FLOW AUX.

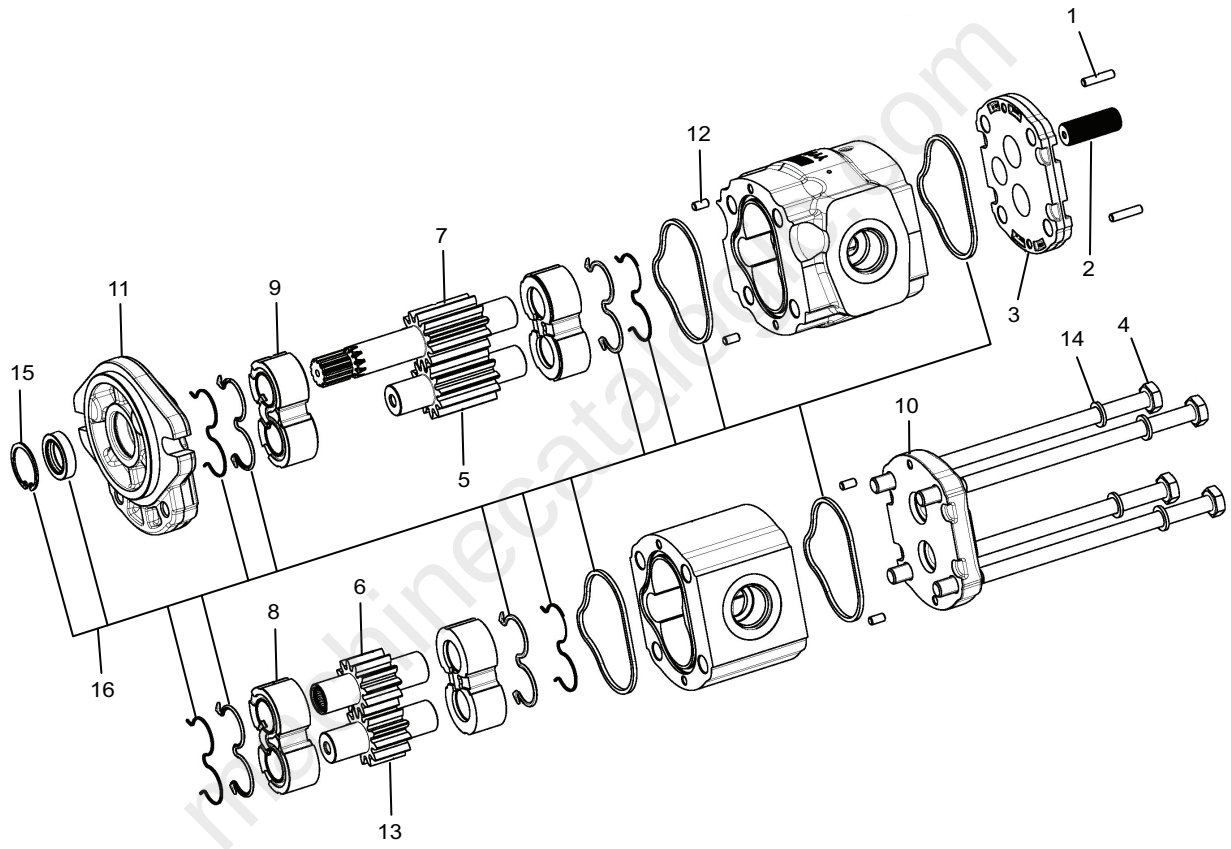

Ref. No.	Part No.	Description	Qty.
1	058610	TEE MJ10-FJS10-MJ10	1
2	067761	90 MJ10-MAORB10	2
3	072580	ST MJ10-MORB10	1
4	131842	LN FL SPIRALOCK 5/16 CZY	2
5	271958	VALVE/SELF LEVEL W/BYPASS (see Page 224 for internal components)	1
6	50313394	TUBE/HYD -10 TILT ROLLBACK (SN 191668 and After)	1
	50302246	TUBE/HYD -10 TILT ROLLBACK (SN 191667 and Before)	1
7	50303193	TUBE/HYD -10 TILT DUMP	1
8	50303194	TUBE/HYD -10 LOWER	1
9	50303196	TUBE/HYD -10 TILT ROLLBACK	1
10	50303197	TUBE/HYD -10 LIFT	1
11	50351125	Y MJ10-MJ10-MORB10	1
12	652040	CB 5/16X2-1/2 C5ZY	2
13	50308187	PLATE/TOP SIZE 2 TWIN FLAT RUB-BER	2

machinecatalogic.com

Part No.	Page No.	Ref. No.
50313218	11	58
50313245	135	9
50313270	209	26
50313287	99	21
50313287	101	21
50313292	105	14
50313321	147	41
50313333	67	51
50313333	69	51
50313333	71	51
50313333	73	51
50313352	187	7
50313371	33	40
50313372	33	1
50313373	33	16
50313393	231	4
50313394	223	6
50313419	23	22
50313568	3	98
50313639	71	50
50313639	73	50
50313648	71	49
50313648	73	49
50313649	71	94
50313649	73	94
50313658	81	31
50313658	83	31
50313663	49	68
50313663	51	68
50313663	109	13
50313663	265	8
50313663	269	8
50313671	71	52
50313671	73	52
50313671	81	50
50313671	83	50
50313673	71	47
50313673	73	47
50313673	81	71
50313673	83	71
50313691	67	94
50313691	69	94
50313691	71	91
50313691	73	91
50313691	77	106
50313691	79	106
50313691	81	102
50313691	83	102
50313691	85	66
50313691	87	66
50313732	135	10
50313771	81	52
50313771	83	52
50313828	49	69
50313828	51	69
50313924	253	5
50313938	253	6
50313976	161	29
50314063	187	8
50314088	145	27
50314088	147	42
50314088	165	23
50314088	167	23
50314105	145	32
50314105	147	43
50314105	165	27
50314105	167	27
50314248	253	7
50314256	253	24
50314259	253	25
50314466	85	40
50314466	87	40
50314472	69	47
50314480	77	71
50314480	79	71
50314507	187	9
50314699	23	98
50314757	135	11
50314762	135	12
50314855	249	2
50314856	249	3
50314939	13	10
50314970	15	7
50315330	135	13
50315440	135	14
50315500	77	51
50315500	79	51
50315500	81	51
50315500	83	51
50315576	199	20
50315577	215	27
50315578	189	16
50315579	209	27
50315715	191	9
50315715	201	7
50315715	211	11
50315715	217	10
50315830	175	32
50316029	143	9
50316029	157	9
50316029	163	9
50316029	169	9
50316135	43	30
50316135	49	67
50316135	51	67
50316194	251	5
50316310	251	6
50316312	251	7
50316373	23	69
50316387	23	64
50316392	117	11
50316393	117	12
50316396	21	13
50316742	251	5
50317466	117	8
50317468	119	3
50317469	127	24
50319109	123	4
50319711	123	12
50319715	123	13

machinerylogic.com

Full Version Available

Mustang 1650R Skid Steer Loader Parts Manual (50940345E)

Mustang 1650R skid steer loader parts manual 50940345 Rev. E: engine, hydraulics, electrical, cab, decals and options. Instant PDF download.

VIEW THE FULL MANUAL

https://machinecatalogic.com/mustang-1650r-skid-steer-loader-parts-manual-50940345e/

Publication No.: 50940345 (Rev. E) · Language: English · Edition: April 2019