MANITOU
HANDLING YOUR WORLD

MUSTANG
BY MANITOU

1650RT
1650RT (EU)
1650RT X-Series



Compact Track Loader

Parts Manual

50950265 Rev. C 03/19

machinecatalogic.com

Mustang 1650RT Compact Track Loader Parts Manual (50950265C)

Document type: Parts Manual (illustrated parts catalogue with part numbers)

Brand: Mustang

Models: 1650RT

Machine: Compact Track Loader

Publication No.: 50950265 (Rev. C)

Edition date: March 2019

Language: English

Main contents

- CHASSIS
- SPECIAL TOOLS, PAINT, ANALYSIS KITS
- DECALS
- GENERAL INFORMATION
- NEW DECAL APPLICATION
- Fittings / O-Ring Compatibility
- HOSE / O-Ring Compatibility
- Abbreviations and Descriptions for fittings
- HYDROSTATICS - DRIVE MOTORS HIGH-FLOW AUXILIARY (T-B/H-F)
- GLASS DOOR COMPONENTS
- HVAC ASSEMBLY - 50311
- T-BAR CONTROLS (PAGE 1 OF 2)
- HAND/FOOT CONTROLS (PAGE 2 OF 2)
- AIR INTAKE
- ELECTRICAL - ENGINE - DPF MODELS
- ELECTRICAL - NEGATIVE BATTERY CABLE - MASTER DISCONNECT
- ELECTRICAL - ROPS/FOPS
- ELECTRICAL - HEATER - DOOR - WIPER
- ELECTRICAL - 14-PIN AUXILIARY CONNECTOR (OPTION)
- ELECTRICAL - AM/FM//WB RADIO (OPTION)
- ELECTRICAL - BACKUP CAMERA (option)
- HYDRAULICS - CHASSIS HYDRAULICS
- HYDRAULICS - HYDRAULIC FILTER
- HYDRAULICS - TILT CYLINDER
- HYDRAULICS - COUPLER BLOCK
- HYDRAULICS - CONTROL VALVE - HIGH-FLOW AUX. (T-B/H-F)
- HYDRAULICS - AUXILIARY (djs)
- HYDRAULICS - CONTROL VALVE (djs)
- HYDRAULICS - GEAR PUMP - HIGH-FLOW AUX. - (DJS)
- HYDRAULICS - SELF-LEVELING - (DJS)
- HYDRAULICS - SELF-LEVEL VALVE
- HYDRAULICS - NO SELF-LEVELING (DJS)
- HYDRAULICS - TANK LINE - HIGH-FLOW AUXILIARY

machinecatalogic.com

Sample pages follow. Full manual: machinecatalogic.com

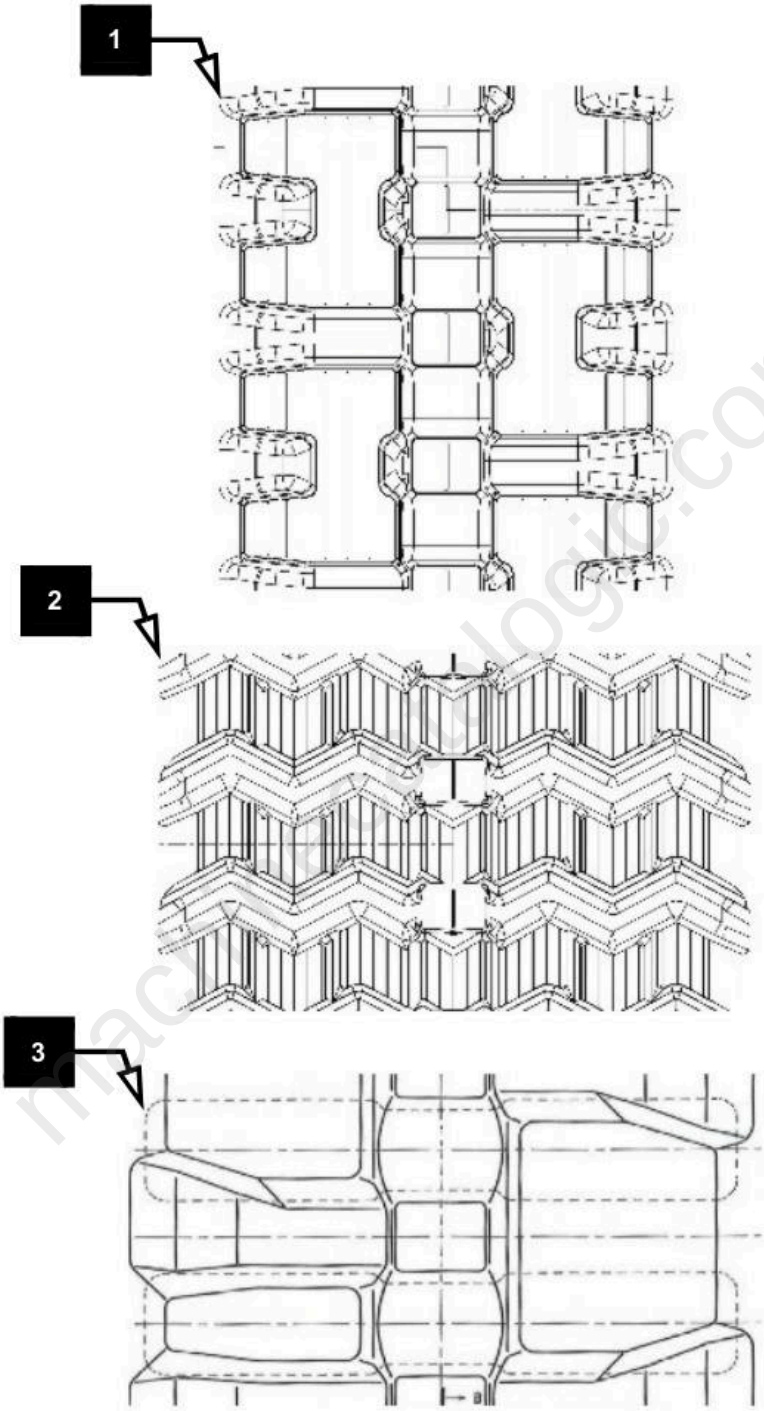

50440120_50440124_50440125

HAND/FOOT CONTROLS - HIGH-FLOW AUXILIARY (PAGE 1 OF 2)

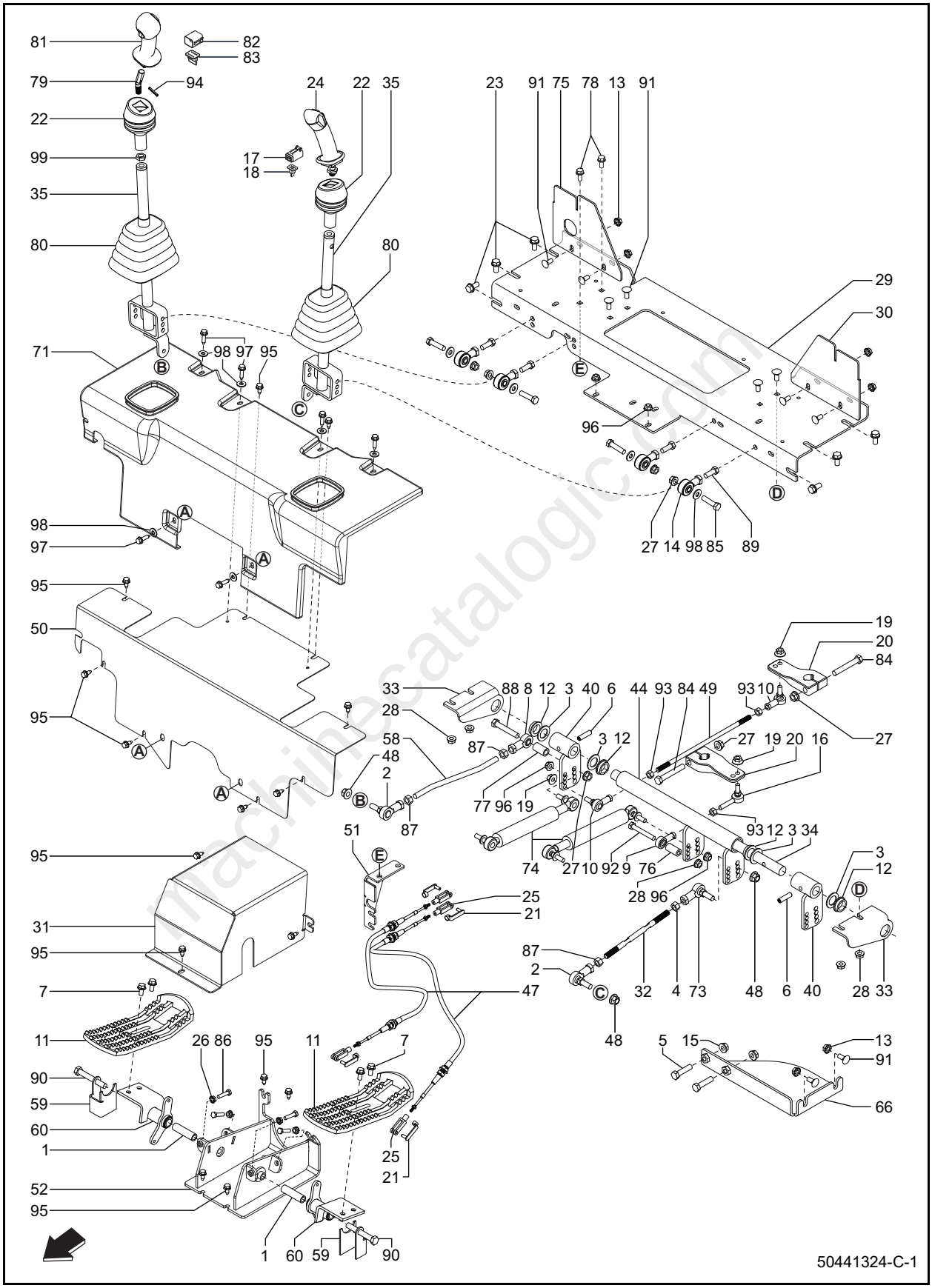

machinescatalogic.com

BATTERY NEG. (-) CABLE W/O MASTER DISCONNECT

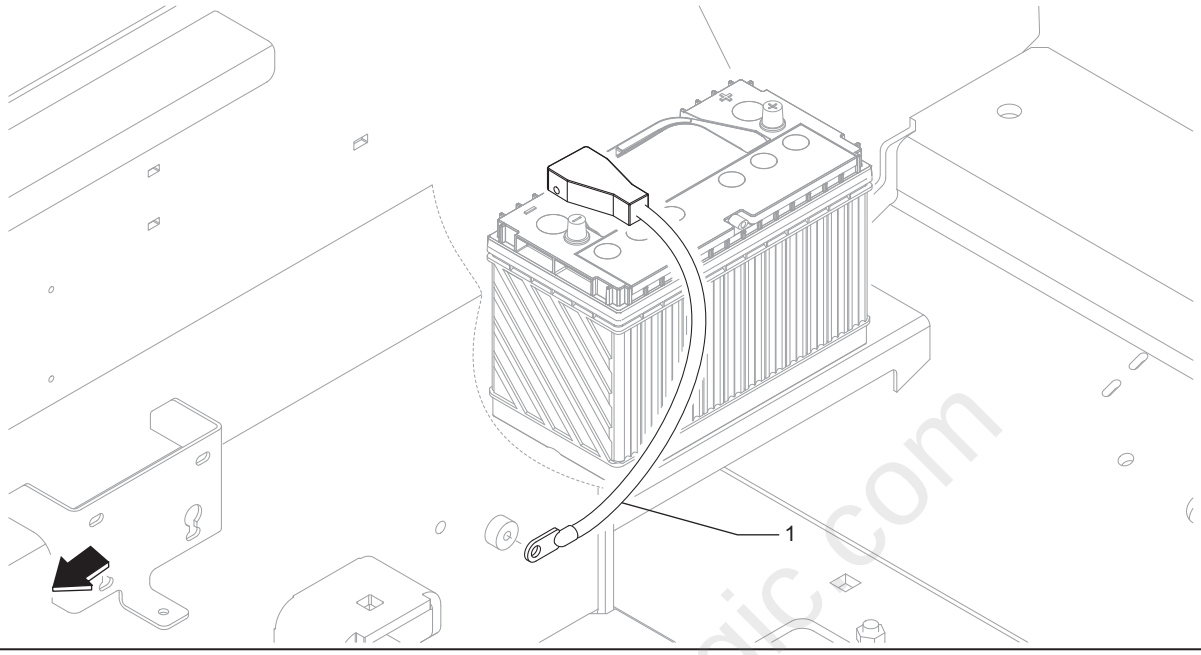

BATTERY NEG. (-) CABLE / MASTER DISCONNECT

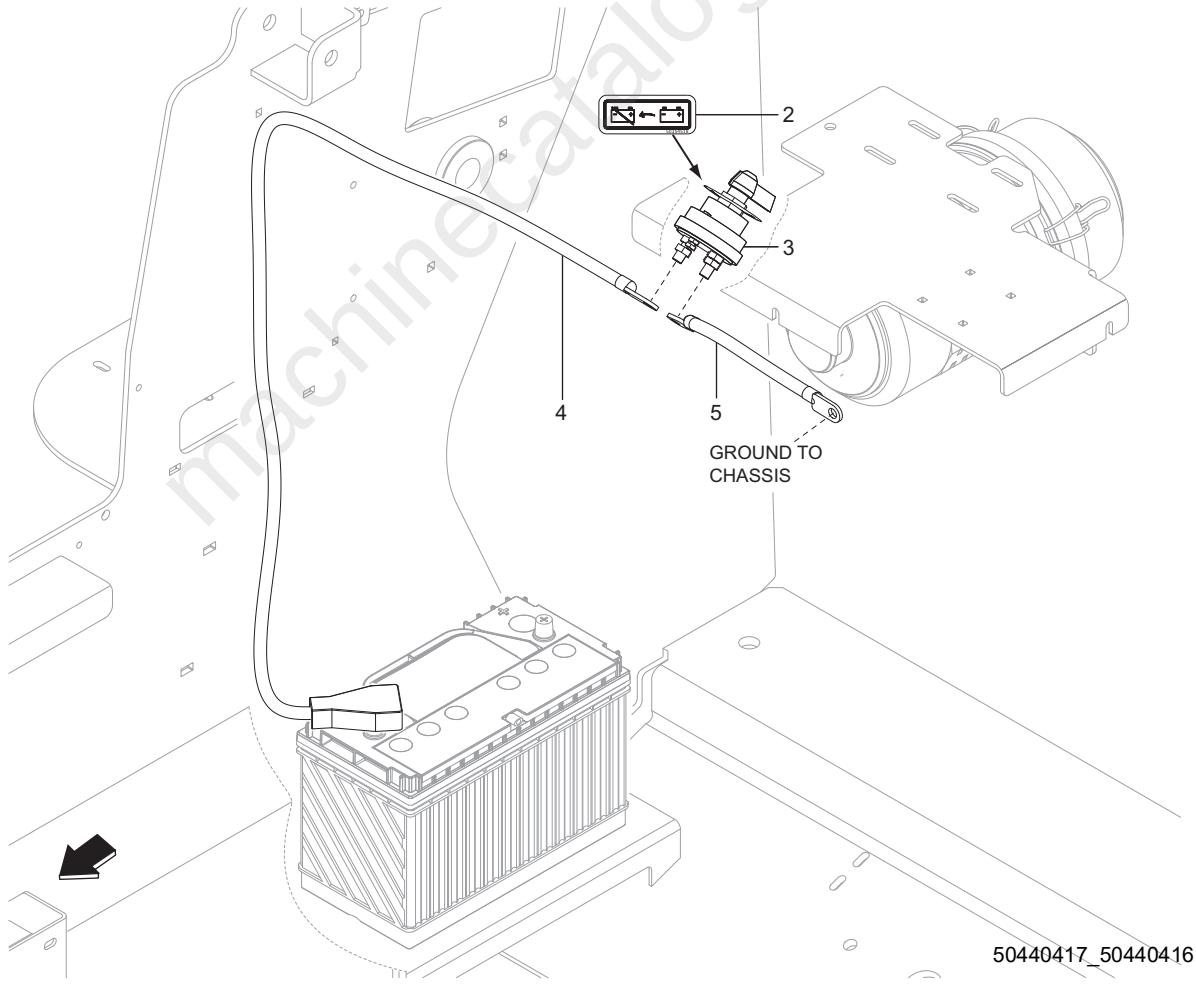

machineCatalogic.com

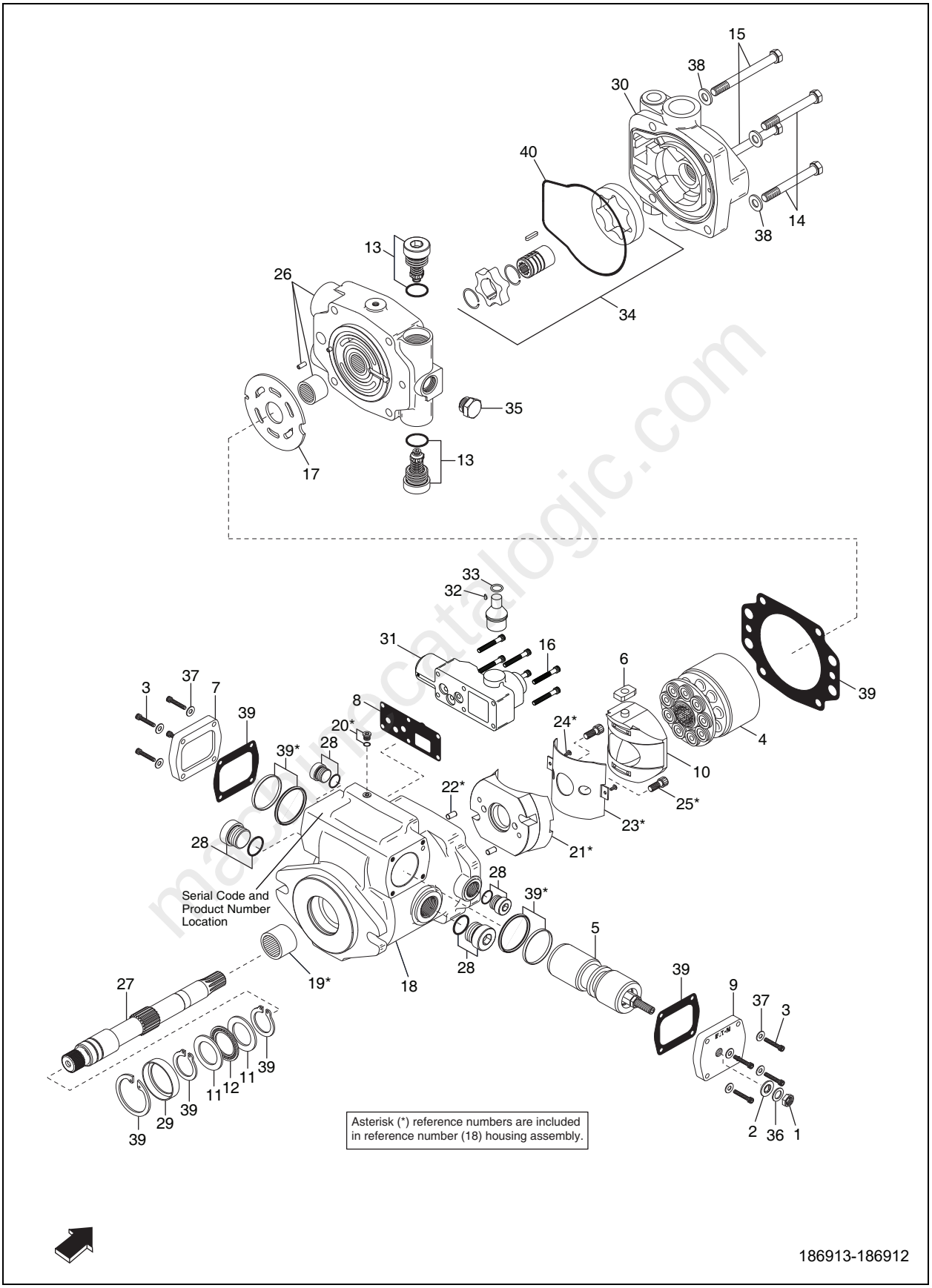

manualcatalogic.com

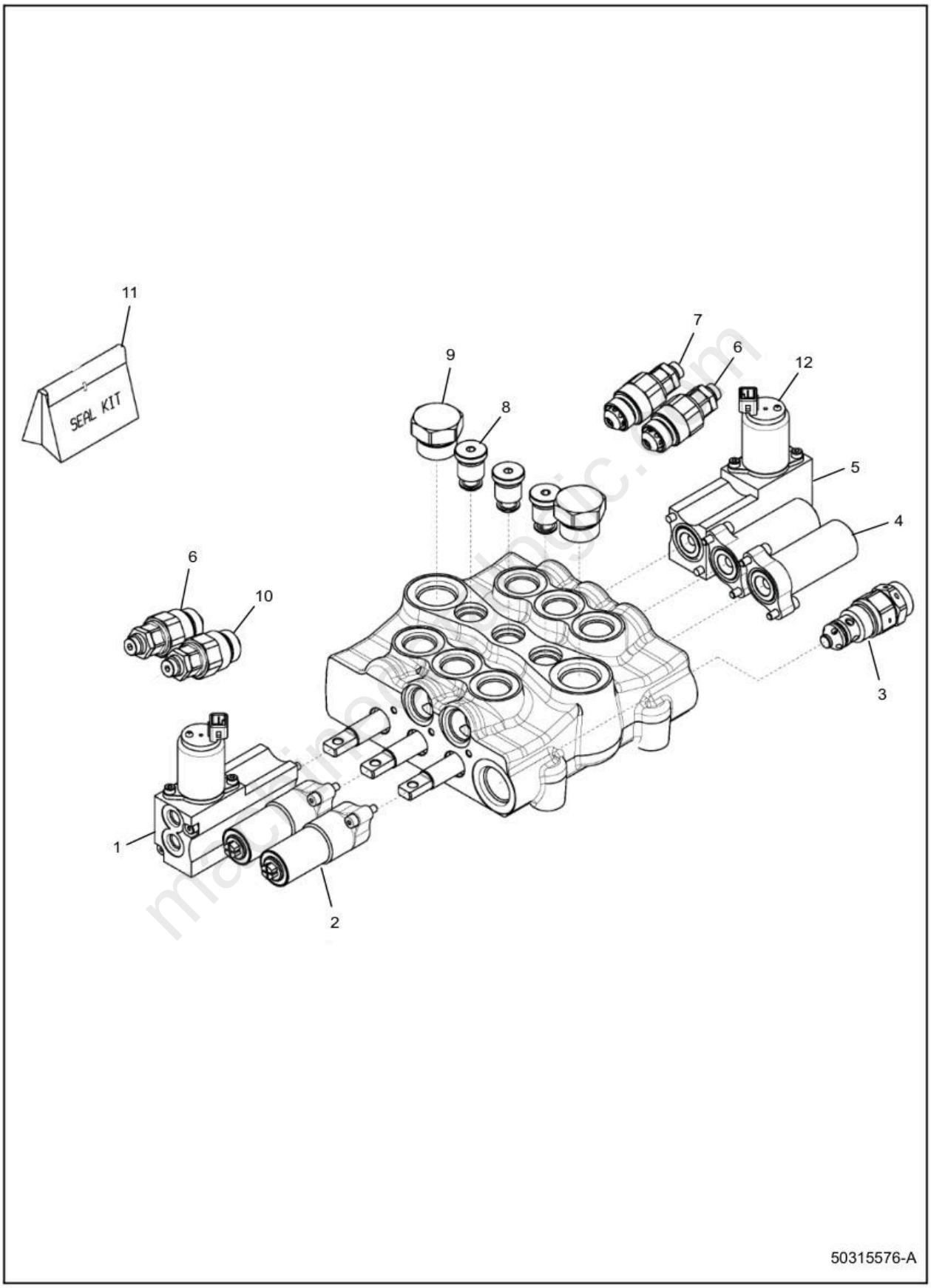
11
SEAL KIT
9
8
7
6
12
5
4
6
10
3
1
2
50315576-A

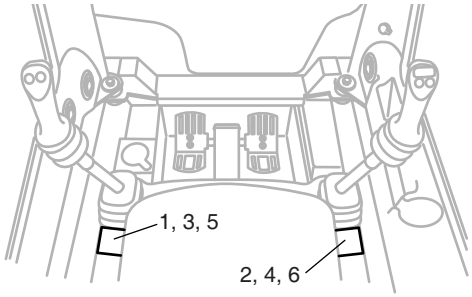

1

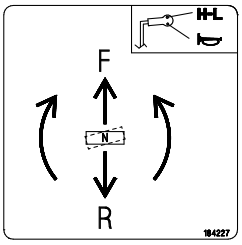

Located on the console behind the left T-bar control (T-bar equipped machines)

2

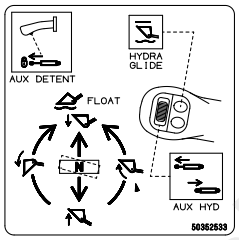

Located on the console behind the right T-bar control (T-bar equipped machines)

3

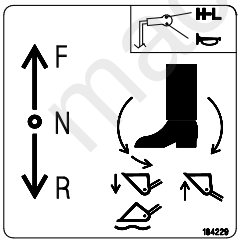

Located on the console behind the left hand control (Hand-foot control equipped machines)

4

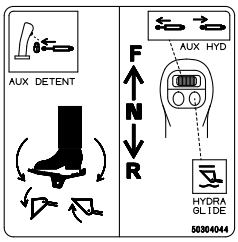

Located on the console behind the right hand control (Hand-foot control equipped machines)

machinecatalogic.com

machinecatalogic.com

Full Version Available

Mustang 1650RT Compact Track Loader Parts Manual (50950265C)

Mustang 1650RT compact track loader parts manual 50950265C: engine, hydrostatics, electrical, cab, tracks, decals. Instant PDF download.

VIEW THE FULL MANUAL

https://machinecatalogic.com/mustang-1650rt-compact-track-loader-parts-manual-50950265c/

Publication No.: 50950265 (Rev. C) · Language: English · Edition: March 2019