MANITOU
HANDLING YOUR WORLD

MUSTANG
BY MANITOU

# 1650RT
# 1650RT (EU)
# 1650RT X-Series

## Compact Track Loader
## Parts Manual

50950465 Rev.D 2022/03

machinecatalogs.com

# Mustang 1650RT Compact Track Loader Parts Manual (50950265D)

Document type: Parts Manual (illustrated parts catalogue with part numbers)

Brand: Mustang

Models: 1650RT

Machine: Compact Track Loader

Publication No.: 50950265 (Rev. D)

Edition date: March 2022

Language: English

## Main contents


- 00-GENERAL INFORMATION AND SAFETY
- 05-SERVICE PARTS AND FILTERS
- 10-ENGINE
- 25-TRACK DRIVE
- 50-LIFT ARM
- 70-HYDRAULICS
- 80-ELECTRICAL
- 85-OPERATOR'S STATION
- 90-CHASSIS
- Appendix A:Pages Index
- Appendix B:Parts Index


machinecatalogic.com

Sample pages follow. Full manual: machinecatalogic.com

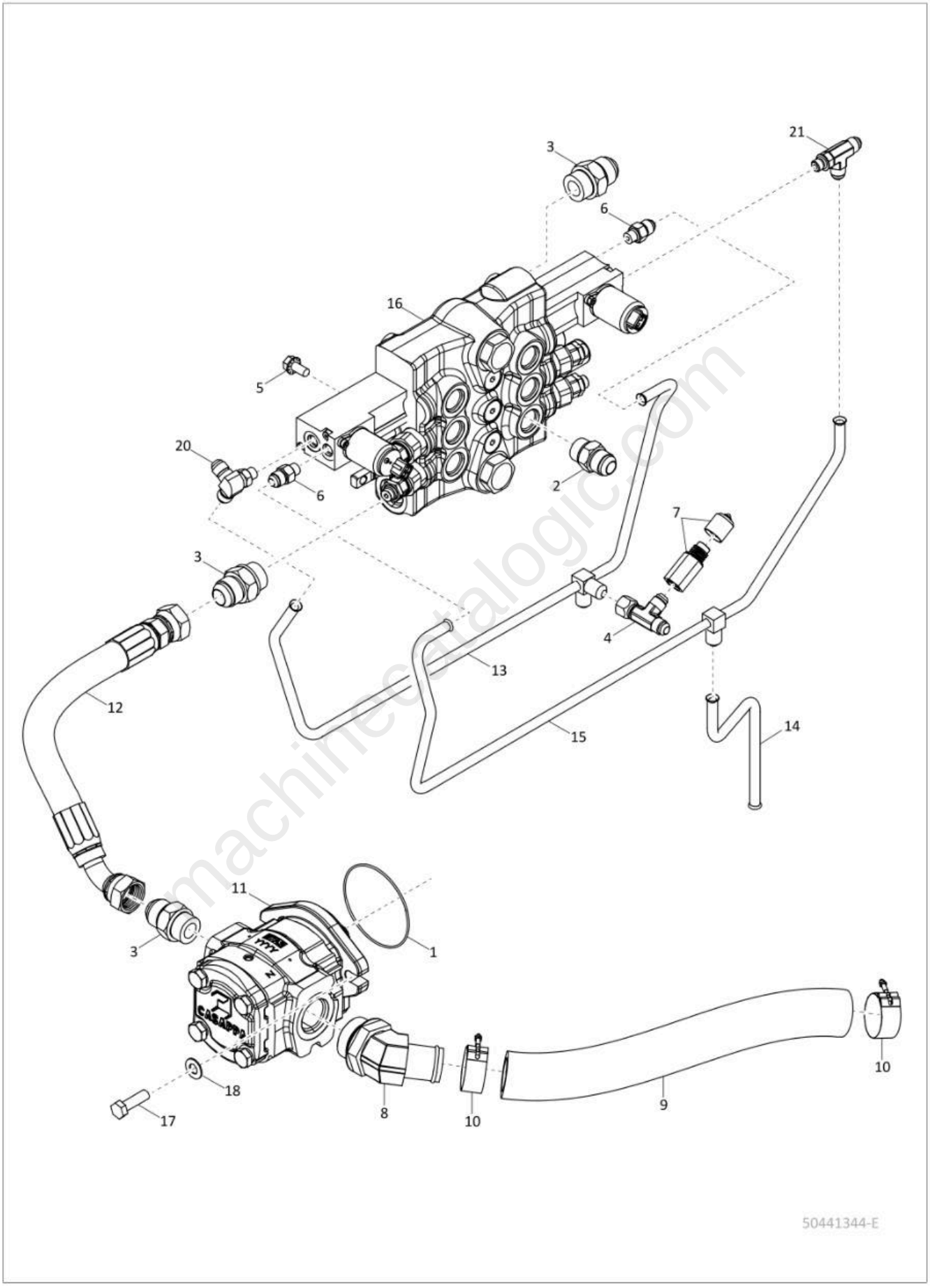


machinecatalogic.com

| Item | Part No. | Name | Qty | Remarks |
|---|---|---|---|---|
| 1 | 50353586 | KIT ELECTRO HYD SPOOL 12V FRONT | 1 | |
| 2 | 240289 | SEAL RETAINER/FLOAT | 1 | |
| 3 | 240288 | SEAL RETAINER | 1 | |
| 4 | 50280176 | MAIN RELIEF | 1 | |
| 5 | 240286 | DETENT KIT | 1 | |
| 6 | 240287 | SPOOL RETURN ACTION KIT | 1 | |
| 7 | 50353575 | KIT ELECTRO HYD SPOOL 12V REAR | 1 | |
| 8 | 240278 | PORT RELIEF/3500 PSI | 2 | |
| 9 | 50315715 | PORT RELIEF/2030 PSI | 1 | |
| 10 | 103060 | PLUG KIT 1-1/6 - 12UNF | 2 | |
| 11 | 240272 | CHECK VALVE KIT | 3 | |
| 12 | 50354512 | PORT RELIEF/2350 PSI | 1 | |
| 13 | 50280185 | COIL/12V DC | 2 | |

machinecatalogic.com

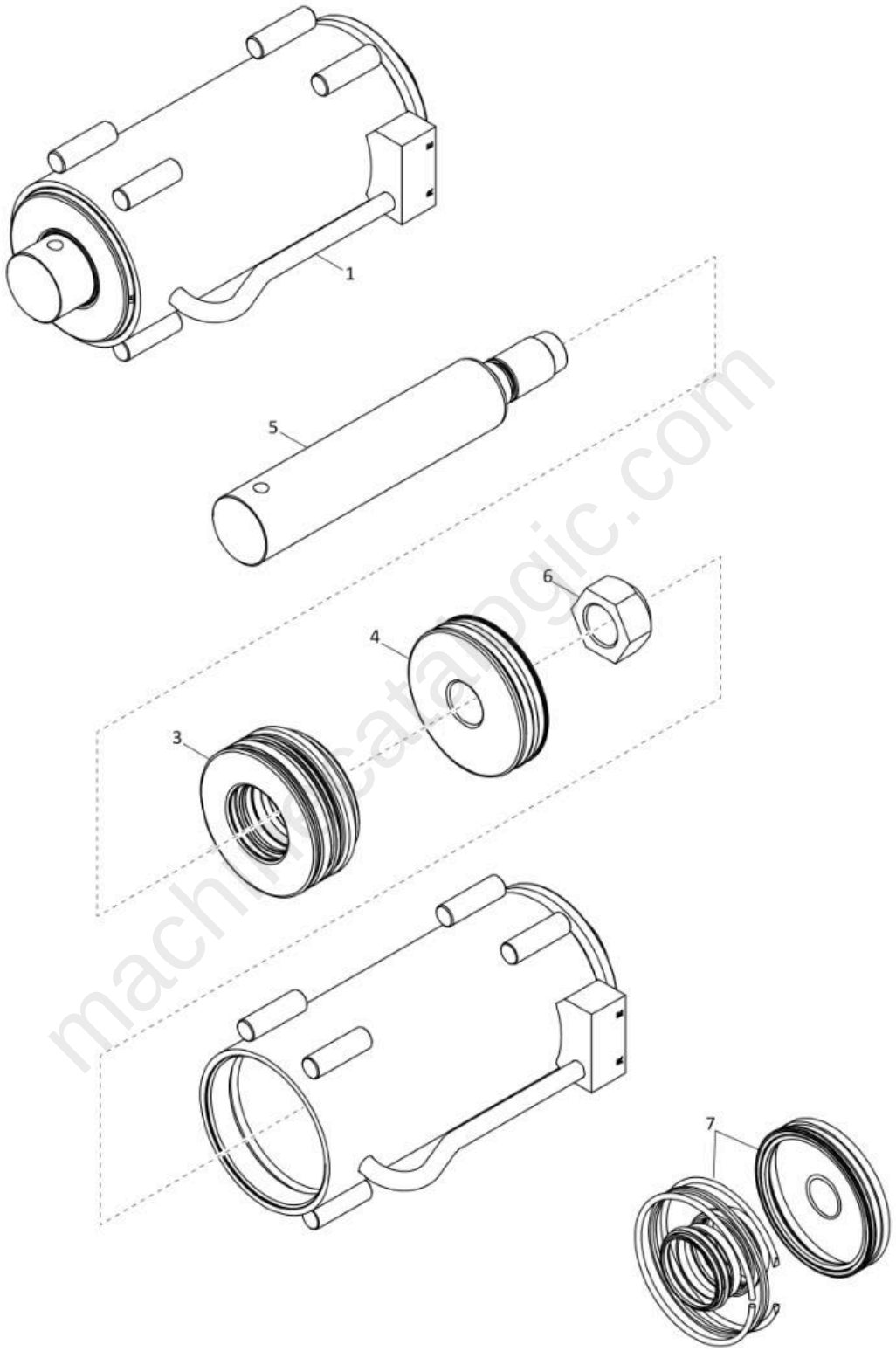


machinecatalogic.com

187581 . . . . . 24, 30, 38, 40
187604 . . . . . 32
187725 . . . . . 36
187726 . . . . . 36
188050 . . . . . 274
188053 . . . . . 274
188161 . . . . . 116
188492 . . . . . 12
188983 . . . . . 64, 116
189192 . . . . . 286, 288
189508 . . . . . 292, 294, 300, 304
190270 . . . . . 286
190646 . . . . . 2, 4
190684 . . . . . 130
190950 . . . . . 370
191037 . . . . . 286
191038 . . . . . 288
191056 . . . . . 128
191331 . . . . . 228, 230
191332 . . . . . 228, 230
191651 . . . . . 22, 28
191711 . . . . . 170
191712 . . . . . 170
191714 . . . . . 170
191716 . . . . . 170
191717 . . . . . 170
191720 . . . . . 170
191735 . . . . . 34
191826 . . . . . 378, 382
192456 . . . . . 266
192601 . . . . . 268
192848 . . . . . 388
193069 . . . . . 64
193156 . . . . . 356
193157 . . . . . 356
193169 . . . . . 76, 78, 80, 82
193206 . . . . . 226
193569 . . . . . 24, 30
193665 . . . . . 76, 78, 80, 82
193710 . . . . . 300
193833 . . . . . 244
193856 . . . . . 220, 222, 224, 226
193971 . . . . . 22, 28
194044 . . . . . 292, 294
194068 . . . . . 22, 28
194126 . . . . . 126
194507 . . . . . 244
194513 . . . . . 88, 90
194929 . . . . . 76, 78
195073 . . . . . 228, 230
195110 . . . . . 210
195112 . . . . . 76, 78, 80, 82
195138 . . . . . 122, 238, 240, 256, 290, 296, 308, 310, 374
195164 . . . . . 288, 292
195568 . . . . . 12, 22, 28
195740 . . . . . 220, 222, 224, 226
195775 . . . . . 2, 4
197635 . . . . . 222
197960 . . . . . 246
197961 . . . . . 254, 258
197962 . . . . . 256
197963 . . . . . 254, 258
197964 . . . . . 254, 258
197970 . . . . . 254, 258
197972 . . . . . 256
197995 . . . . . 254, 258
197996 . . . . . 246
197998 . . . . . 10, 254, 258
198001 . . . . . 252, 256
198178 . . . . . 192, 196
200-32287 . . . . . 298
201229 . . . . . 252, 256
201230 . . . . . 252, 256
201231 . . . . . 252, 256
201233 . . . . . 252, 256
210-19469 20, 26, 32, 34, 88, 90, 96, 100, 102, 110, 112, 126, 128, 236, 238, 240, 250, 254, 258, 278, 280, 282, 288, 312, 320, 338, 342, 360, 366, 378, 382
210-19470 22, 28, 32, 34, 36, 42, 74, 126, 128, 212, 260, 282, 284, 288, 298, 340, 344, 350, 360, 366, 370, 374, 378, 382
210-19532 . . . . . 274, 276, 378, 382
210-19533 . . . . . 26, 32, 238, 240, 256, 292, 294, 300, 304, 378, 382
210-31017 . . . . . 42, 292, 294, 300, 304, 320
210-32183 . . . . . 244, 262
210-32184 . . . . . 72
220-16148 . . . . . 298
220-28739 . . . . . 300
220-32536 . . . . . 378, 382
220-32680 . . . . . 298, 300
230-24749 . . . . . 72, 96, 110, 112
230-30569 . . . . . 106
230-32195 . . . . . 104, 114
230-32753 . . . . . 106
240021 . . . . . 22, 28
240055 . . . . . 330
240197 . . . . . 156, 158
240272 . . . . . 134, 136, 138, 140, 142, 144, 146, 148
240273 . . . . . 138, 140, 146, 148
240276 . . . . . 138, 140, 146, 148
240278 . . . . . 134, 136, 138, 140, 142, 144, 146, 148
240286 . . . . . 134, 136, 142, 144
240287 . . . . . 142, 144
240288 . . . . . 134, 136, 142, 144
240289 . . . . . 134, 136, 142, 144
240503 . . . . . 40
240645 . . . . . 270
240903 . . . . . 214
241117 . . . . . 210, 214
241354 . . . . . 270
241459 . . . . . 24, 30
241477 . . . . . 12, 24, 30
241544 . . . . . 270
241562 . . . . . 24, 30
241563 . . . . . 24, 30
241605 . . . . . 20, 26
241932 . . . . . 24, 30

machinecatalogic.com

machinecatalogic.com

# Full Version Available

## Mustang 1650RT Compact Track Loader Parts Manual (50950265D)

Mustang 1650RT Compact Track Loader parts manual, 50950265 Rev. D: engine DPF and non-DPF, track drive, hydraulics, decals. Instant PDF download.

VIEW THE FULL MANUAL

https://machinecatalogic.com/mustang-1650rt-compact-track-loader-parts-manual-50950265d/

Publication No.: 50950265 (Rev. D) · Language: English · Edition: March 2022