170Z

COMPACT EXCAVATOR

PARTS MANUAL

PART #50940096

Revision B - 12/12

machinecatalogic.com

Mustang 170Z Compact Excavator Parts Manual (50940096B)

Document type: Parts Manual (illustrated parts catalogue with part numbers)

Brand: Mustang

Models: 170Z

Machine: Compact Excavator

Publication No.: 50940096 (Rev. B)

Edition date: December 2012

Language: English

Main contents

- Introduction
- Fig. 35 - Control Equipment (Lock Lever & Stand) (Right)
- Fig. 36 - Control Equipment (Low-High Pedal)
- Fig. 37 - Control Equipment (P.T.O. Pedal)
- Fig. 39 - Arm Rest
- Fig. 40 - Control Valve Plate
- Fig. 41 - Track Frame
- Fig. 42 - Crawler Guard
- Fig. 43 - Turning Frame
- Fig. 44 - Turning Bearing
- Fig. 45 - Cover (Lower)
- Fig. 46 - Cover (Turning Frame Under)
- Fig. 48 - Cover (Hose)
- Fig. 49 - Cover (Seat Mount)
- Fig. 51 - Cover (Side)
- Fig. 53 - Step (P.T.O. Spec.)
- Fig. 54 - Instrument Panel
- Fig. 55 - Seat
- Fig. 56 - Seat Mount
- Fig. 57 - Seat Belt
- Fig. 59 - Hood
- Fig. 60 - Canopy
- Fig. 61 - Pump Mount
- Fig. 62 - Hyd. Oil Pump
- Fig. 63 - Boom Cylinder
- Fig. 64 - Arm Cylinder
- Fig. 65 - Bucket Cylinder
- Fig. 66 - Swing Cylinder
- Fig. 67 - Blade Cylinder
- Fig. 68 - Variable Leg Widen/Shorten Cylinder
- Fig. 69 - Travel Motor
- Fig. 70 - Turning Motor
- Fig. 71 - Swivel Joint

machinecatalogic.com

Sample pages follow. Full manual: machinecatalogic.com

TABLE OF CONTENTS

Introduction i
Compact Excavator 1
Special Tools, Paint 1
Figure Index (1) - Main Parts 2
Figure Index (2) - Hydraulic Section 3
Fig. 2 - Label 4
Fig. 3 - Safety Label 6
Fig. 4 - Silencer 8
Fig. 5 - Air Cleaner 10
Fig. 6 - Accelerator Lever 12
Fig. 7 - Engine Mount 14
Fig. 8 - Radiator & Mount 16
Fig. 9 - Fuel Tank 18
Fig. 10 - Fuel Line 20
Fig. 11 - Fuel Filter & Water Separator 22
Fig. 12 - Electric Part (Engine) 24
Fig. 13 - Electric Part (Seat Mount) 26
Fig. 14 - Battery 28
Fig. 15 - Travel Alarm (Switch) 30
Fig. 17 - Travel Alarm 32
Fig. 18 - Start Switch 34
Fig. 20 - Work Lamp 36
Fig. 21 - Sprocket (Rubber Crawler) 38
Fig. 22 - Sprocket (Iron Crawler) 40
Fig. 23 - Idler & Adjust (Rubber Crawler) 42
Fig. 24 - Idler & Adjust (Iron Crawler) 44
Fig. 25 - Track Roller (Rubber Crawler) 46
Fig. 26 - Track Roller (Iron Crawler) 48
Fig. 27 - Shoe Side Plate (Rubber Crawler) 50
Fig. 28 - Shoe Side Plate (Iron Crawler) 52
Fig. 29 - Crawler 54
Fig. 30 - Control Equipment (Travel Lever) 56
Fig. 31 - Control Equipment (Blade Lever) 58
Fig. 32 - Control Equipment (Variable Leg Lever) 60
Fig. 33 - Control Equipment (Swing Pedal) 62
Fig. 34 - Control Equipment (Lock Lever & Stand) (Left) 64
Fig. 35 - Control Equipment (Lock Lever & Stand) (Right) 66
Fig. 36 - Control Equipment (Low-High Pedal) 68
Fig. 37 - Control Equipment (P.T.O. Pedal) 70
Fig. 39 - Arm Rest 72
Fig. 40 - Control Valve Plate 74
Fig. 41 - Track Frame 76
Fig. 42 - Crawler Guard 78
Fig. 43 - Turning Frame 80
Fig. 44 - Turning Bearing 82
Fig. 45 - Cover (Lower) 84
Fig. 46 - Cover (Turning Frame Under) 86
Fig. 48 - Cover (Hose) 88
Fig. 49 - Cover (Seat Mount) 90
Fig. 51 - Cover (Side) 92
Fig. 53 - Step (P.T.O. Spec.) 94
Fig. 54 - Instrument Panel 96
Fig. 55 - Seat 98
Fig. 56 - Seat Mount 100
Fig. 57 - Seat Belt 102
Fig. 59 - Hood 104
Fig. 60 - Canopy 106
Fig. 61 - Pump Mount 108
Fig. 62 - Hyd. Oil Pump 110
Fig. 63 - Boom Cylinder 112
Fig. 64 - Arm Cylinder 114
Fig. 65 - Bucket Cylinder 116
Fig. 66 - Swing Cylinder 118
Fig. 67 - Blade Cylinder 120
Fig. 68 - Variable Leg Widen/Shorten Cylinder 122
Fig. 69 - Travel Motor 124
Fig. 70 - Turning Motor 126
Fig. 71 - Swivel Joint 128
Fig. 72 - Control Valve (1/7) 130
Fig. 73 - Control Valve (2/7) 132
Fig. 74 - Control Valve (3/7) 134
Fig. 75 - Control Valve (4/7) 136
Fig. 76 - Control Valve (5/7) 138
Fig. 77 - Control Valve (6/7) 140
Fig. 78 - Control Valve (7/7) 142
Fig. 79 - 2-Way Valve 144
Fig. 80 - Remote Control Valve 146
Fig. 81 - Stop Valve 148

machinecatalogic.com

170Z - COMPACT EXCAVATOR

FIG. 13 - ELECTRIC PART (SEAT MOUNT)

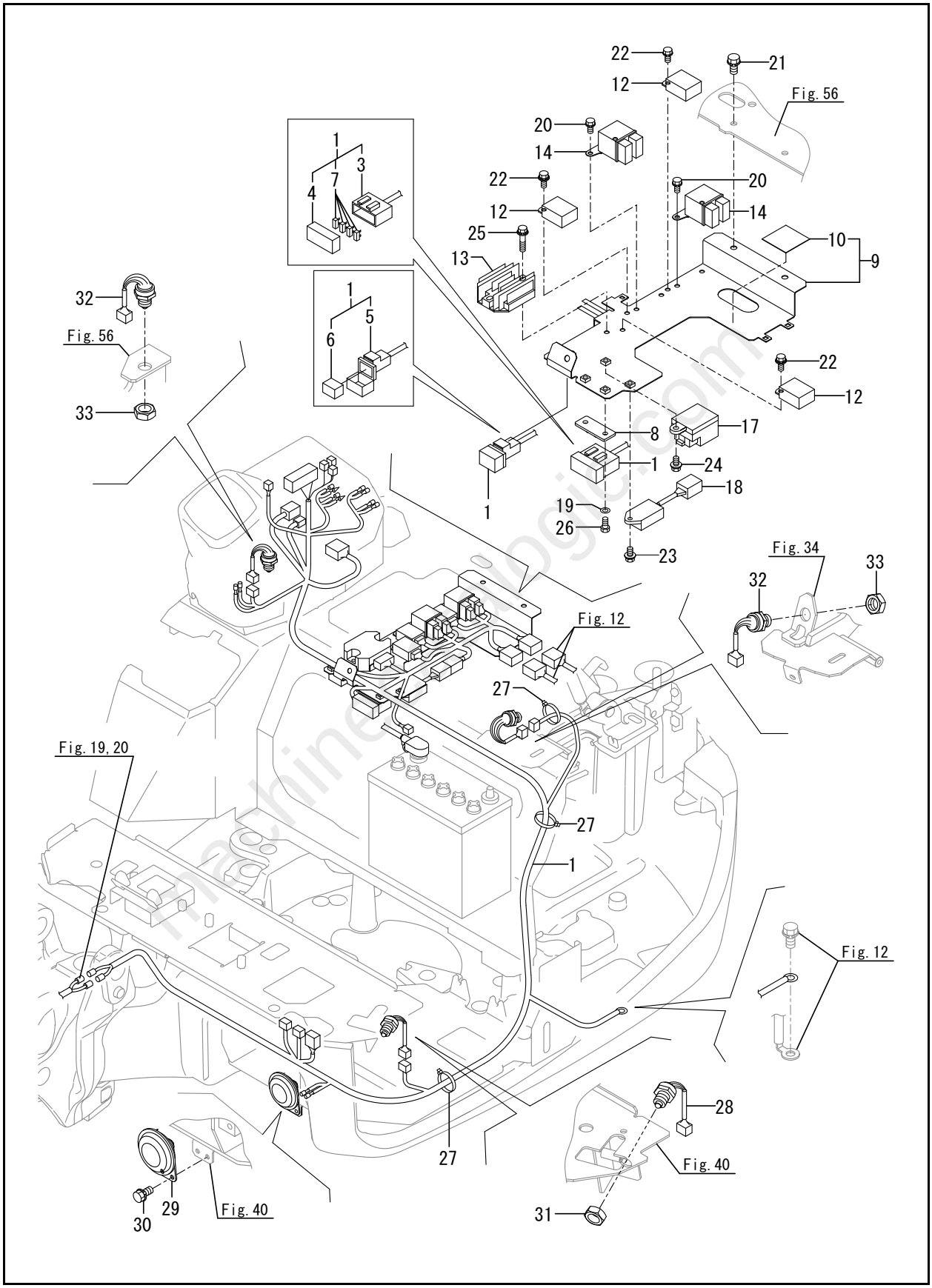

Machinerylogic.com

FIG. 34 - CONTROL EQUIPMENT (LOCK LEVER & STAND) (LEFT)

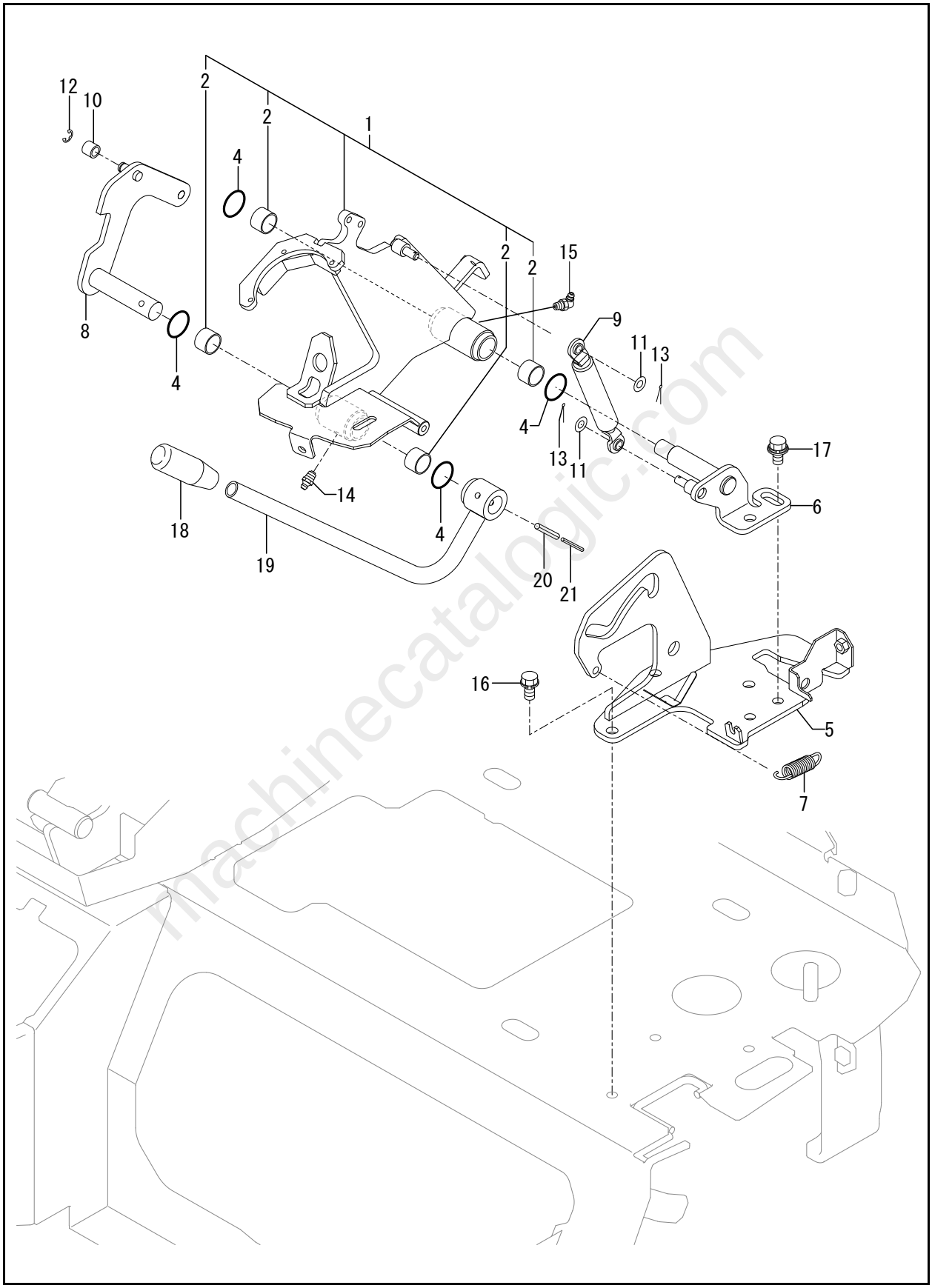

machinecatalogic.com

FIG. 62 - HYD. OIL PUMP

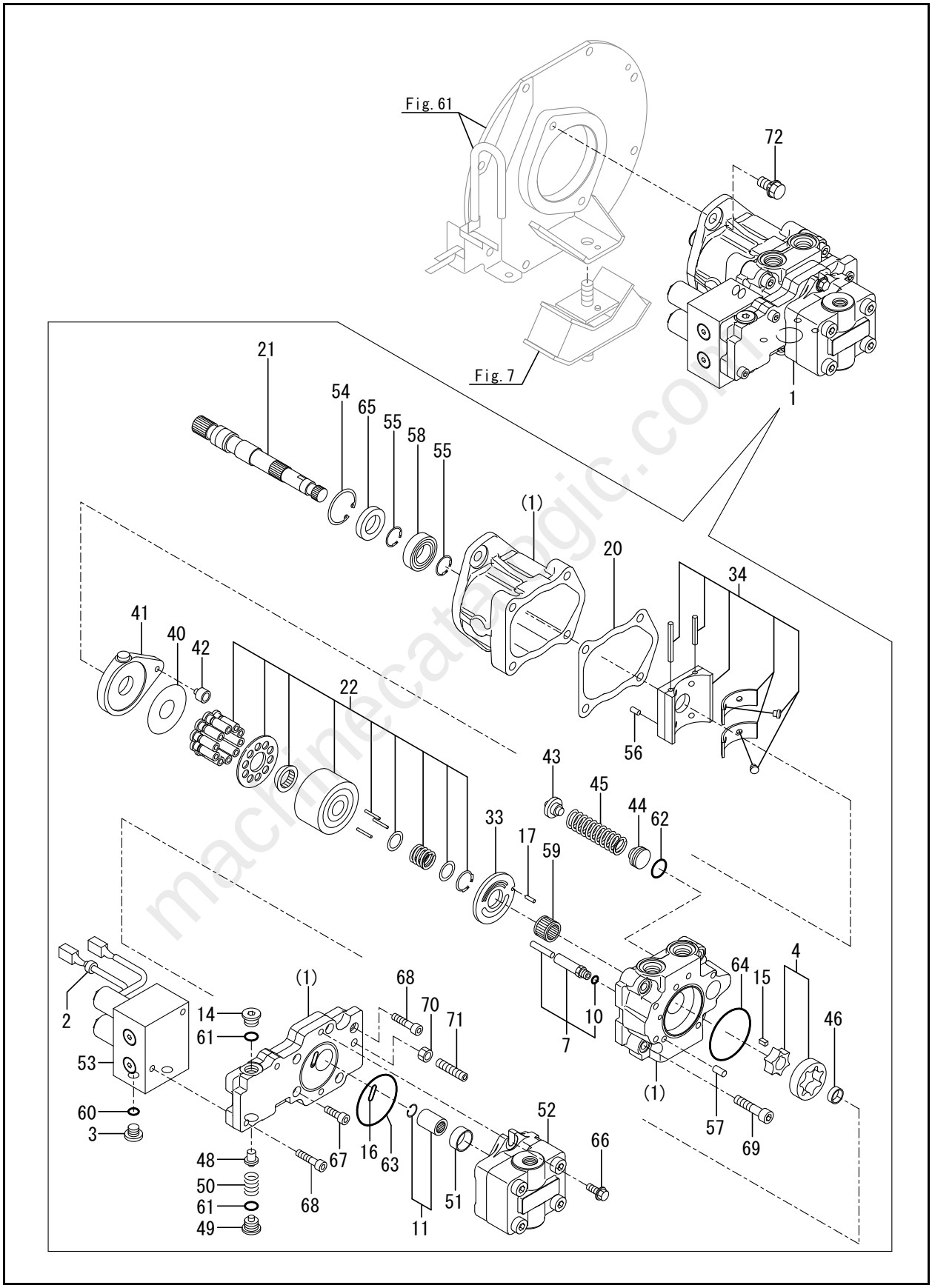

machinecatalogic.com

FIG. 72 - CONTROL VALVE (1/7)

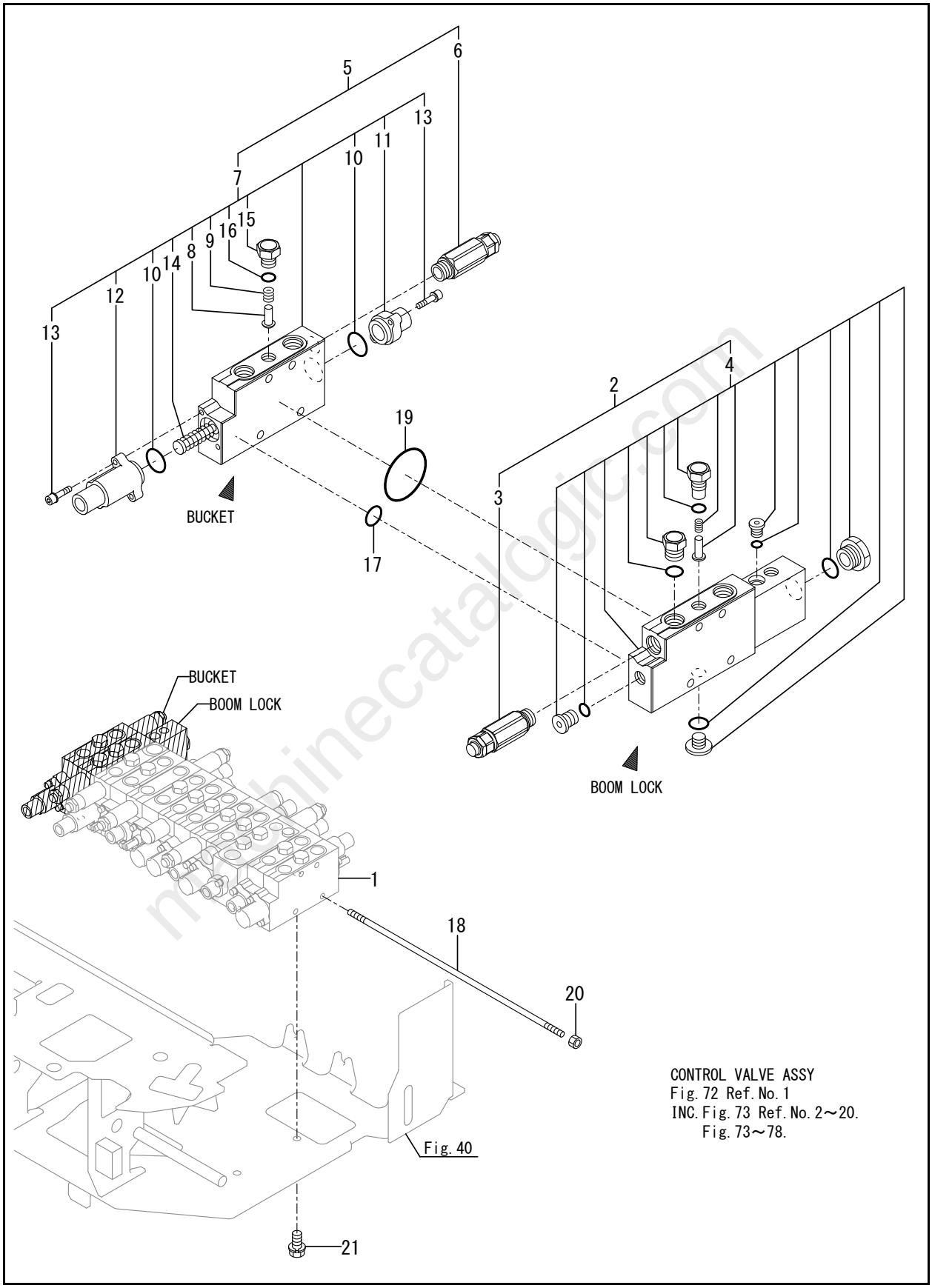

CONTROL VALVE ASSY
Fig. 72 Ref. No. 1
INC. Fig. 73 Ref. No. 2～20.
Fig. 73～78.

machinecatalogic.com

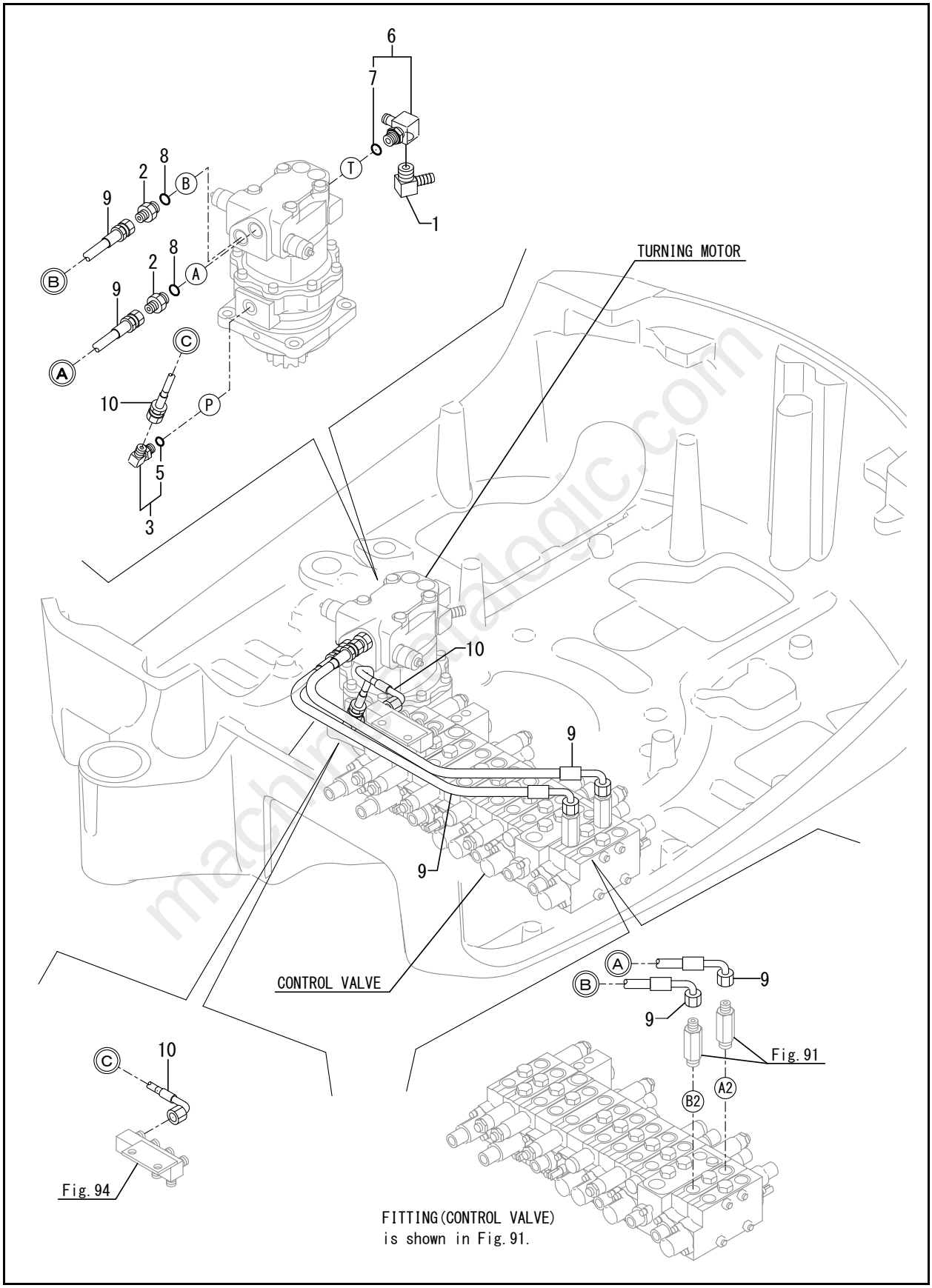
6
7
T
1
8
2
B
9
B
8
2
A
9
A
C
10
P
5
3
TURNING MOTOR
10
9
9
CONTROL VALVE
A
B
9
9
Fig. 91
B2
A2
C
10
Fig. 94
FITTING(CONTROL VALVE)
is shown in Fig. 91.

Ref. No.	Part No.	Description	Qty.
1	50285232	SPACER	4
2	50285234	COLLAR	4
3	50286596	BLADE ASSY	1
4	50285849	BLADE ASSY	1
5	50285850	SIDE BLADE ASSY LT	1
6	50285851	SIDE BLADE ASSY RT	1
7	50285852	PIN ASSY,30X76 A	2
8	50285853	PIN ASSY,30X76 B	2
9	50285357	PIN 25X143	2
10	50285358	PIN 25	2
11	50285884	COTTER PIN 4.0X40	2
12	50282497	NIPPLE PT1/8,GREASE	2
13	50282498	NIPPLE B,GREASE	2
14	50282516	BOLT W/WASHER M10X25	4
15	50285933	SHIM 30, PIN ADJUST	4

machinecatalogic.com

machinecatalogic.com

Full Version Available

Mustang 170Z Compact Excavator Parts Manual (50940096B)

Mustang 170Z compact excavator parts manual 50940096 Rev. B: engine, hydraulic, electrical, undercarriage and decal parts figures. Instant PDF download.

VIEW THE FULL MANUAL

https://machinecatalogic.com/mustang-170z-compact-excavator-parts-manual-50940096b/

Publication No.: 50940096 (Rev. B) · Language: English · Edition: December 2012