(50940299) 170Z NXT2 (SN 00701 and Up) Parts Manual

PARTS MANUAL

machinecatalogic.com

Mustang 170Z NXT2 Compact Excavator Parts Manual (50940299)

Document type: Parts Manual (illustrated parts catalogue with part numbers)

Brand: Mustang

Models: 170Z NXT2

Machine: Compact Excavator

Publication No.: 50940299

Serial numbers: SN 00701 and Up

Language: English

Main contents

- INTRODUCTION
- SPECIAL TOOLS & PAINT
- GASKETS, BELTS, FILTERS QUICK-REFERENCE
- FIGURE INDEX
- FIG. 2 - LABEL (EXTERIOR)
- FIG. 3 - LABEL (BONNET INSIDE)
- FIG. 5 - LABEL (CANOPY)
- FIG. 6 - SILENCER
- FIG. 7 - AIR CLEANER
- FIG. 8 - ACCELERATOR LEVER
- FIG. 9 - ENGINE MOUNT
- FIG. 10 - RADIATOR & MOUNT
- FIG. 11 - FUEL TANK
- FIG. 12 - FUEL PIPING
- FIG. 13 - FUEL FILTER & WATER SEPARATOR (INNER PARTS)
- FIG. 14 - BATTERY
- FIG. 15 - ELECTRIC PARTS (ENGINE)
- FIG. 16 - ELECTRIC PARTS (SEAT MOUNT)
- FIG. 17 - BATTERY (GROUND CABLE)
- FIG. 18 - ELECTRICAL PARTS (VALVE PLATE)
- FIG. 19 - TRAVEL ALARM (SWITCH)
- FIG. 21 - TRAVEL ALARM
- FIG. 22 - STARTER SWITCH
- FIG. 23 - LEVER STAND
- FIG. 25 - WORK LAMP
- FIG. 26 - POWER SUPPLY SOCKET
- FIG. 27 - SPROCKET
- FIG. 28 - IDLER & ADJUST
- FIG. 29 - TRACK ROLLER
- FIG. 30 - SHOE SIDE PLATE
- FIG. 31 - CRAWLER
- FIG. 32 - TRAVEL PEDAL
- FIG. 33 - TRAVEL LEVER

machinecatalogic.com

Sample pages follow. Full manual: machinecatalogic.com

FIG. 6 - SILENCER

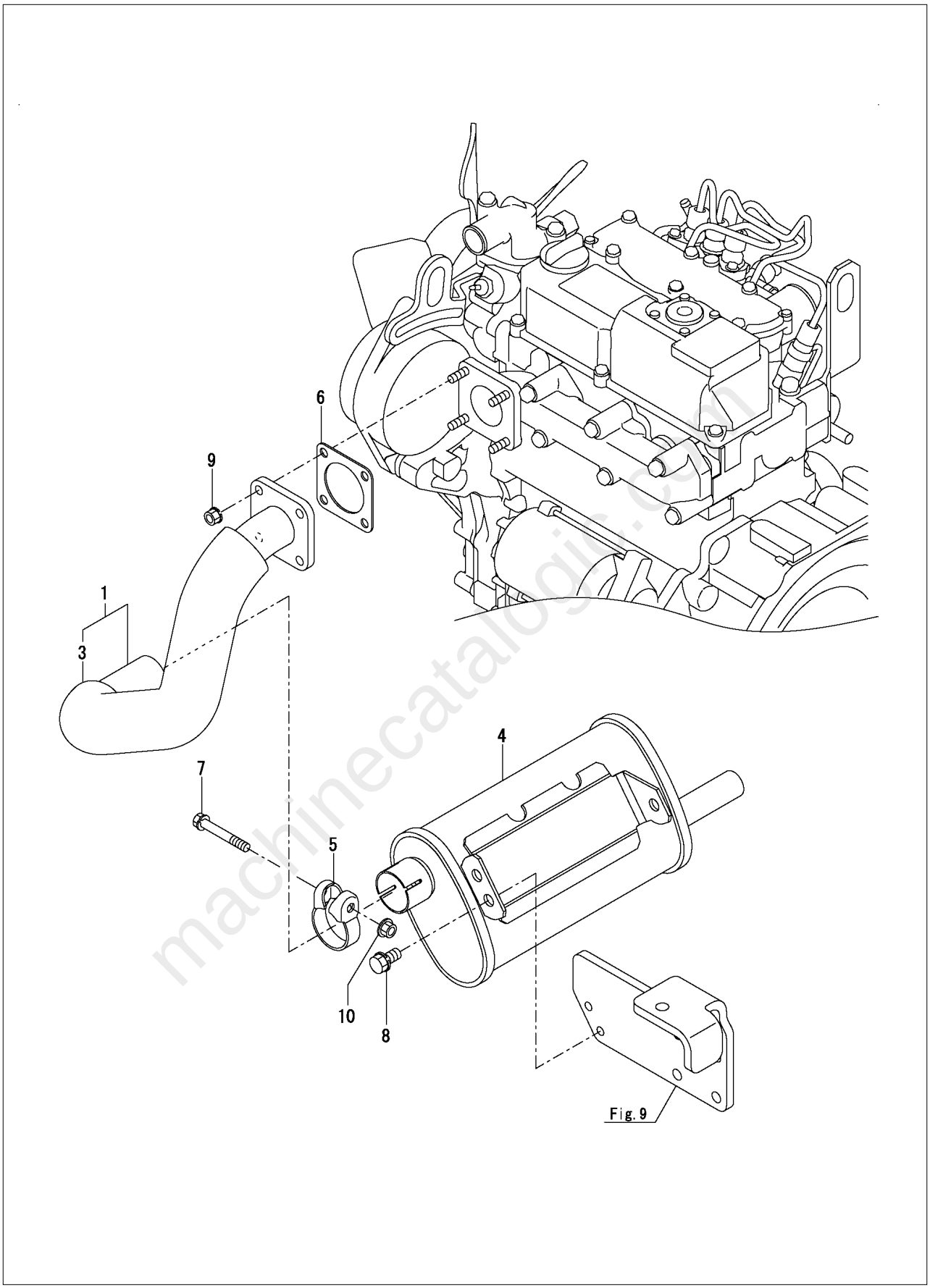

machinecatalogic.com

FIG. 22 - STARTER SWITCH

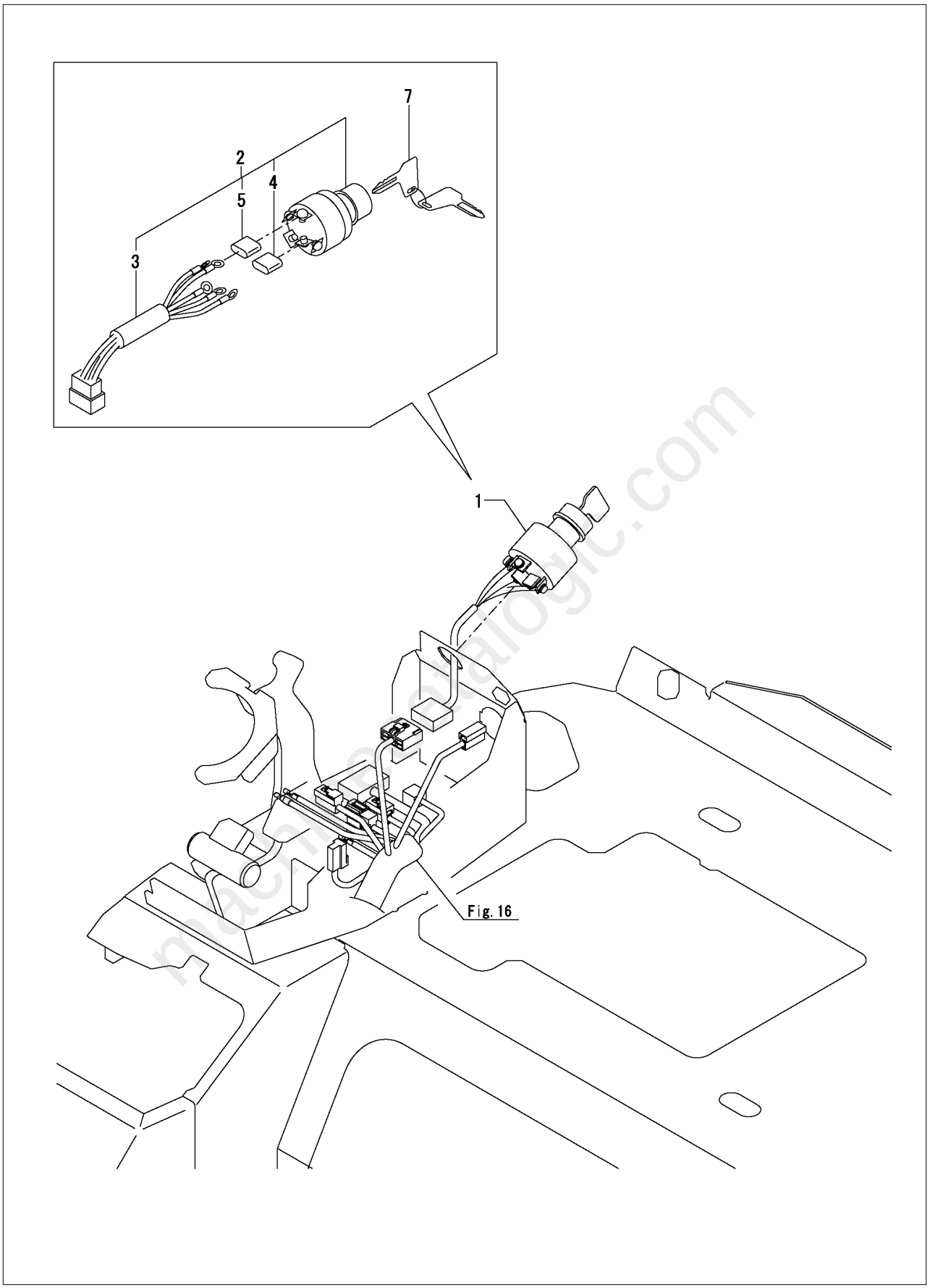

machinecatalogic.com

Item	Part No.	Name	Qty	Remarks
1	50282078	MONITOR ASSY	1	
2	50282843	SWITCH ASSY, LIGHT	1	
3	50282845	CAP	2	
4	50282846	GASKET	2	
5	50283587	IN-PANE,L	1	
6	50283588	IN-PANE, R	1	
7	50281318	BOLT 8X 16	6	
8	50282422	SCREW 5X12	4	

machinecatalogic.com

Item	Part No.	Name	Qty	Remarks
1	50285547	PIN 30X95	1	
2	50285548	PIN 30X65	1	
3	50285549	LOCK PLATE	2	
4	50285644	VARIABLE CYLINDER ASSY	1	
5	50290984	SEAL	1	
8	50285615	SEAL SET,HEAD 55 30	1	
13	50285634	U-NUT M22X1.5	1	
14	50285285	ROCK WASHER 55	1	
16	50285646	ROD,ASSY,VARIABLE	1	
17	50285647	HEAD ASSY, 55 30	1	
19	50285900	BUSHING 30X30	1	
20	50290993	PISTON	1	
21	50282438	JOINT RGI1/4	2	
22	50282539	BOLT 10X25 W/PLW+SPW	4	

machinecatalogic.com

Item	Part No.	Name	Qty	Remarks
1	50285701	TRAVEL L SEC ASSY	1	
2	50283050	DUST WIPER	1	
3	50283051	BRACKET, OIL SEAL	1	
4	50283054	CAP, SPRING	1	
5	50283059	CHECK VALVE	1	
6	50283060	SPRING, CHECK VALVE	1	
7	50285702	SPOOL ASSY,TRAVEL	1	
8	50283061	PLUG GPM1/32	2	
9	50283066	STAY, CHECK VALVE	1	
10	425-34776	O-RING 1A P-12.0	1	
11	197813	BOLT M5X10	2	
12	50284129	BOLT M5X18	2	
13	50282607	PACKING, 11.0	1	
14	50285703	SUPPLY PART	1	
15	50285704	SUPPLY SEC ASSY	1	
16	50283055	PACKING S 22	2	
17	50283056	COVER B1, PILOT	1	
18	50283058	SWP HEX.BOLT 5X20	4	
19	50283062	SEAT, SPRING	1	
20	50283063	SPRING,RETURN	1	
21	50283064	COVER A2, PILOT	1	
22	50285714	VALVE, RELIEF 210	2	
23	50285391	PACKING G 4	2	
24	197795	O-RING 1A P-6.0	1	
25	50285889	O-RING 1A P-18.0	1	

machinecatalogic.com

FIG. 107 - BLADE

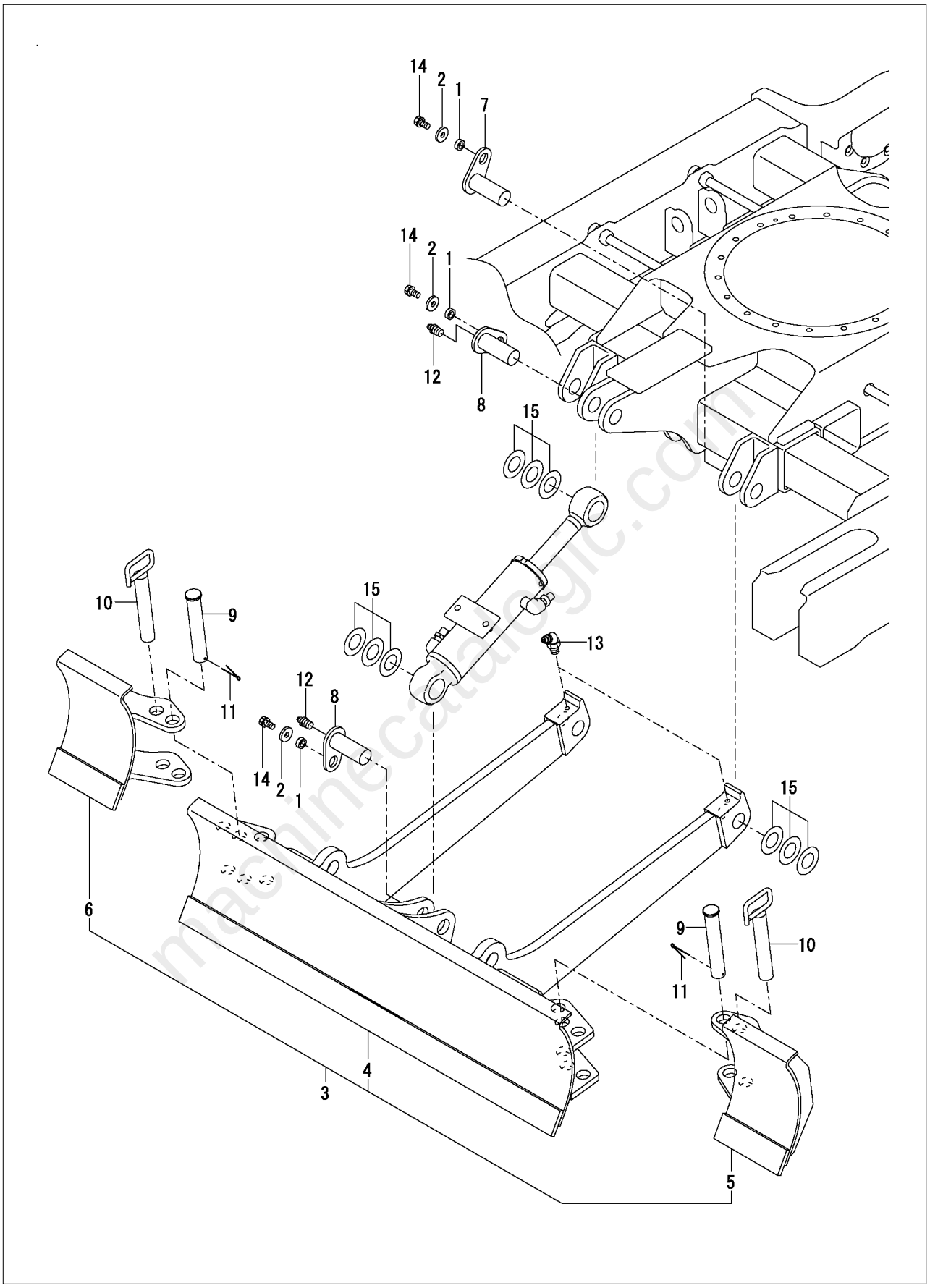

machinecatalogic.com

Full Version Available

Mustang 170Z NXT2 Compact Excavator Parts Manual (50940299)

Mustang 170Z NXT2 compact excavator parts manual 50940299, SN 00701 and up: engine, hydraulics, electrical, undercarriage, decals. Instant PDF download.

VIEW THE FULL MANUAL

https://machinecatalogic.com/mustang-170z-nxt2-compact-excavator-parts-manual-50940299/

Publication No.: 50940299 · Language: English