MANITOU
HANDLING YOUR WORLD

MUSTANG
BY MANITOU

1750RT
1750RT NXT2
1750RT NXT3

Compact Track Loader
Parts Manual



50960115 Rev.D 02/19

All Serial Numbers

machinecatalogic.com

Mustang 1750RT, 1750RT NXT2 and 1750RT NXT3 Compact Track Loader Parts Manual (50960115D)

Document type: Parts Manual (illustrated parts catalogue with part numbers)

Brand: Mustang

Models: 1750RT, 1750RT NXT2 and 1750RT NXT3

Machine: Compact Track Loader

Publication No.: 50960115 (Rev. D)

Edition date: February 2019

Serial numbers: All Serial Numbers

Language: English

Main contents

- Service Parts
- Decals
- Cab
- Chassis
- Electrical
- Engine
- Tracks
- Loader Arm
- Loader Arm Hydraulics
- Hydraulics
- Hydraulics (continued)
- Hydraulic Components
- Reference

machinecatalogic.com

Sample pages follow. Full manual: machinecatalogic.com

1750RT - DECALS
SIDE - MANITOU

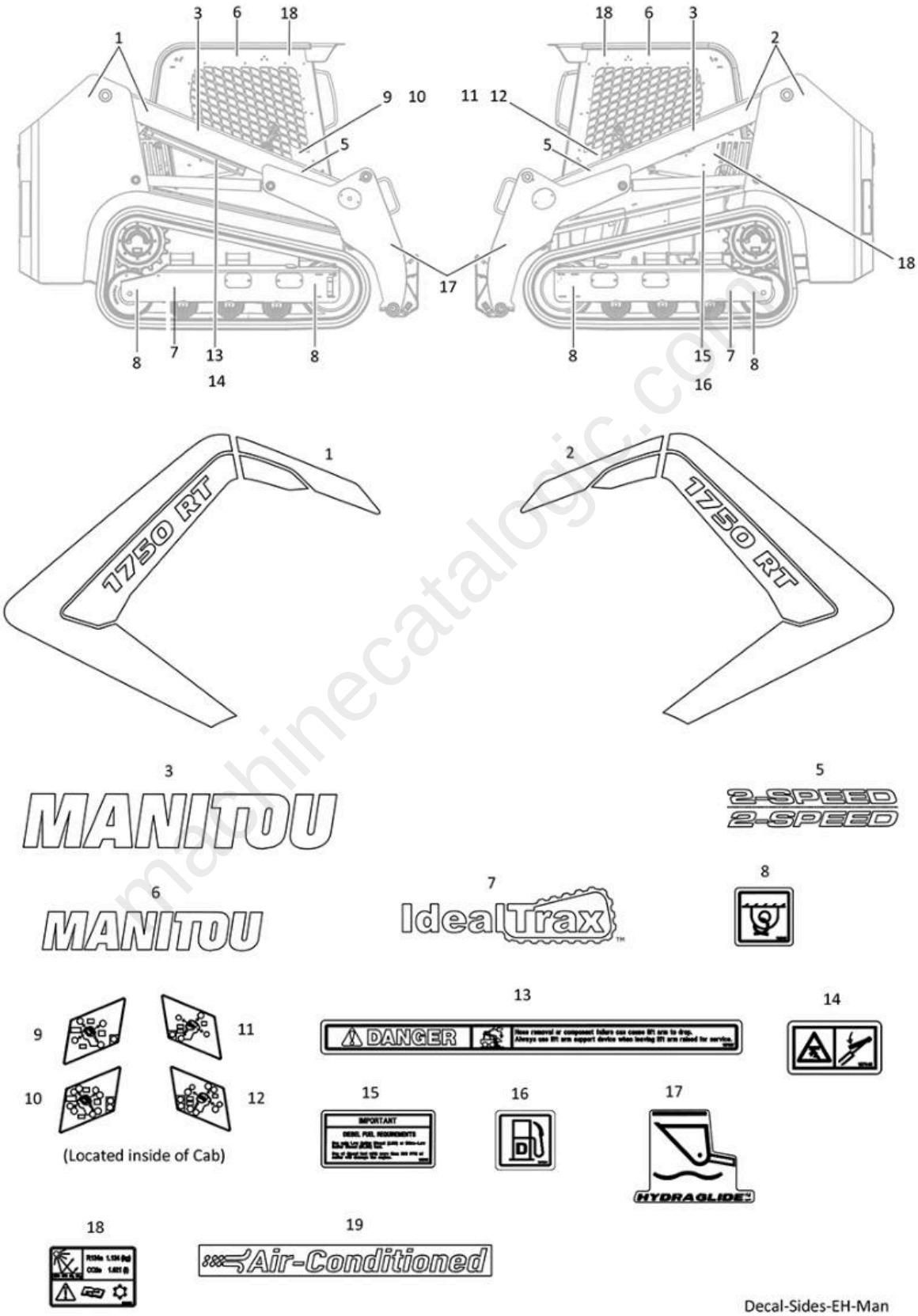

machinecatalogic.com

SERIES I DOOR LATCH

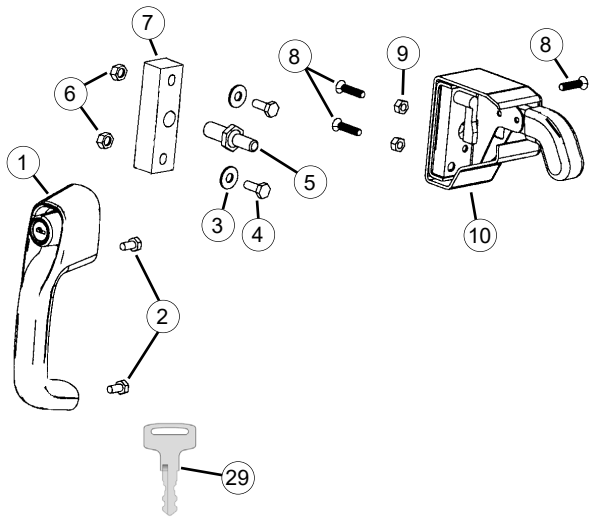

Item No.	Part No.	Description	Qty.
01	273340	HANDLE, PUSH BUTTON	1
02	656092	CS M6-1x12 C8.8 ZY DIN931	2
03	654002	FW 1/4" AWZY	AR
04	650426	CS 1/4" x 1-1/4" C5ZY	2
05	187724	STRIKER, CAM LATCH	1
06	070634	LN LG FL SERR 1/4" CZ	AR
07	274594	MOUNT, STRIKER	1
08	651800	FHSCS M6-1x30 C8.8 ZY DIN7991	3
09	651457	LN INS M6-1 C8 ZY DIN6924	2
10	182076	LATCH, CAM	1
11	273340	HANDLE, PUSH BUTTON	1
12	656092	CS M6-1x12 C8.8 ZY DIN931	1
13	650584	FW #10 AZY	3
14	656100	HN M5-0.8 C8 ZY	1
15	651521	CS M5-0.8 x 16 C8.8 ZY	1

SERIES II and III DOOR LATCH

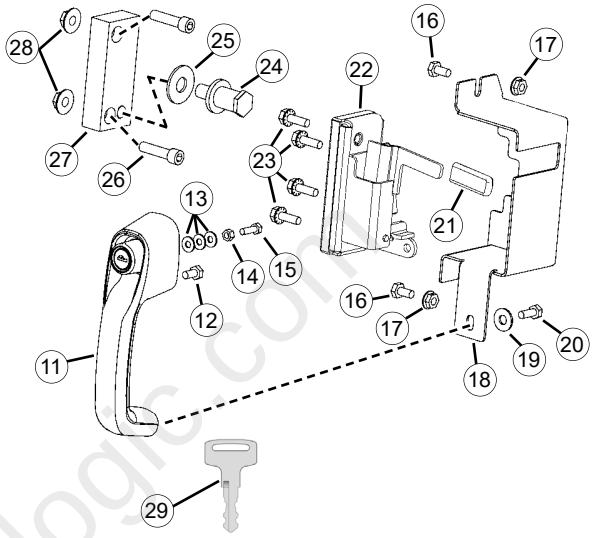

Item No.	Part No.	Description	Qty.
16	650542	CS 1/4" x 1/2" C5ZY	2
17	210-32184	HN FL CLOC 1/4" CZY	2
18	50303454	COVER	1
19	654002	FW 1/4 AWZY	1
20	656149	CS M16-1x16 C8.8 ZY	1
21	50303465	LATCH HANDLE GRIP	1
22	50303453	LATCH	1
23	072916	CS FL LOCK 1/4" x 3/4" C5ZY	4
24	420-36187	STRIKER	1
25	654046	FW 7/16" AWZY	1
26	650896	SHCS HS 5/16" x 1-1/4" C	2
27	50303416	MOUNT, STRIKER	1
28	210-31017	HN LF CLOC 5/16" CZY	2
29	50280186	KEY	1
		(not included with handle)	

mecatalogic.com

AIR CONDITIONING COMPRESSOR

Serial Numbers: 131301 and up; EU — 511051 and up; RW — 031051 and up

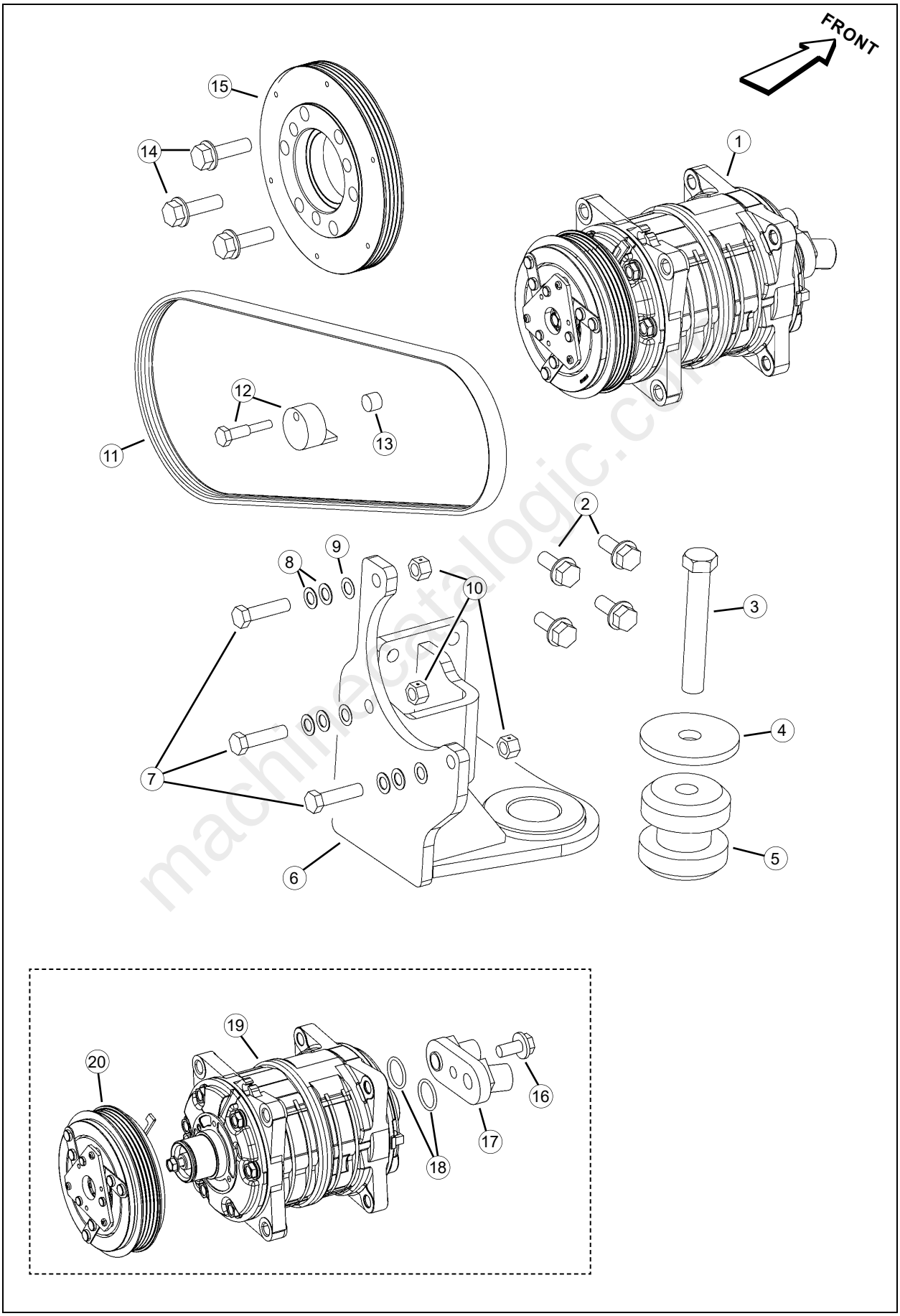

machinecatalogic.com

1750RT - ELECTRICAL

BATTERY CIRCUIT / ENGINE WIRE HARNESS

Serial Numbers: 131201 and up; RW — 031051 and up

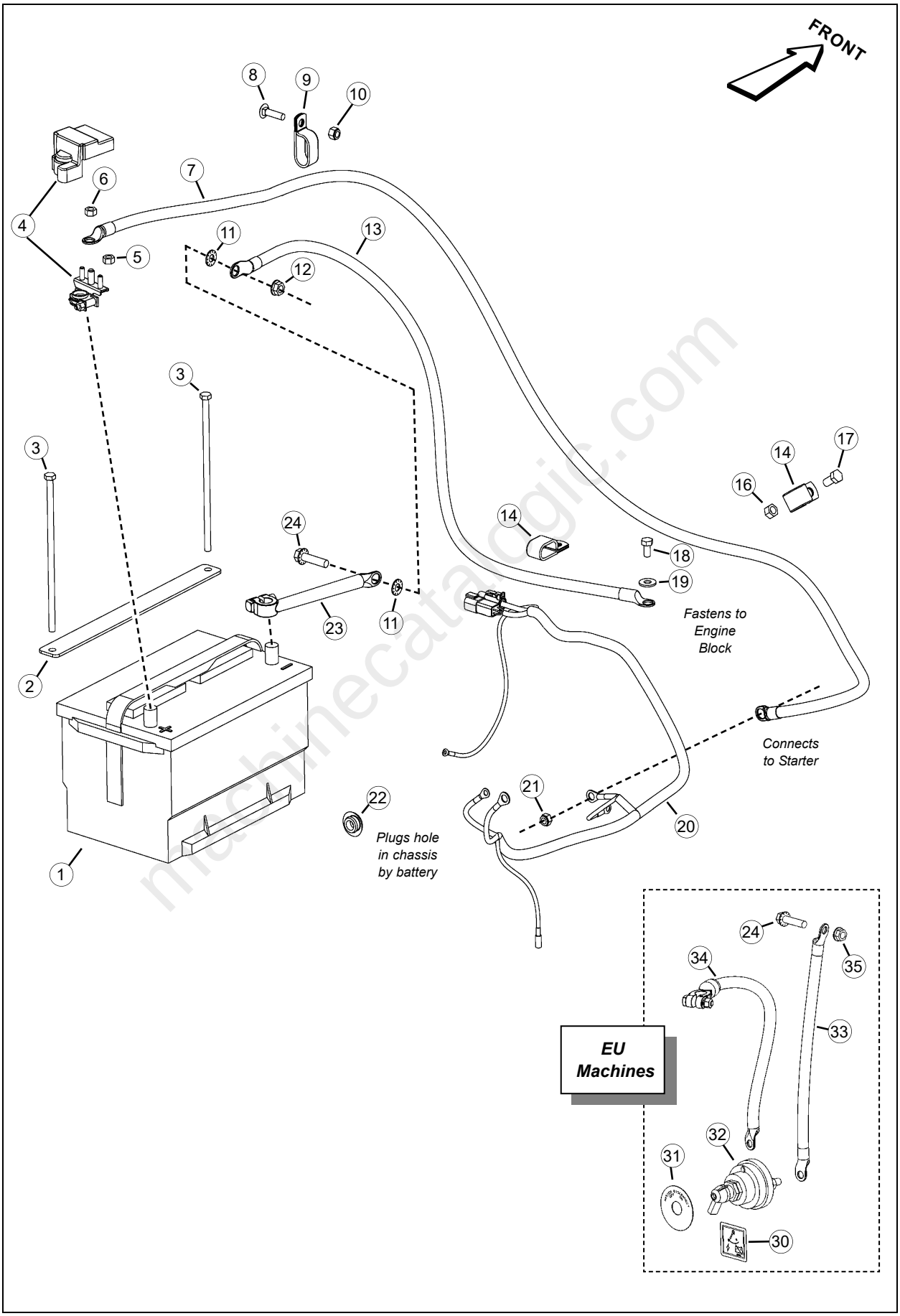

machinecatalogic.com

1750RT - ENGINE

FUEL TANK

Series II

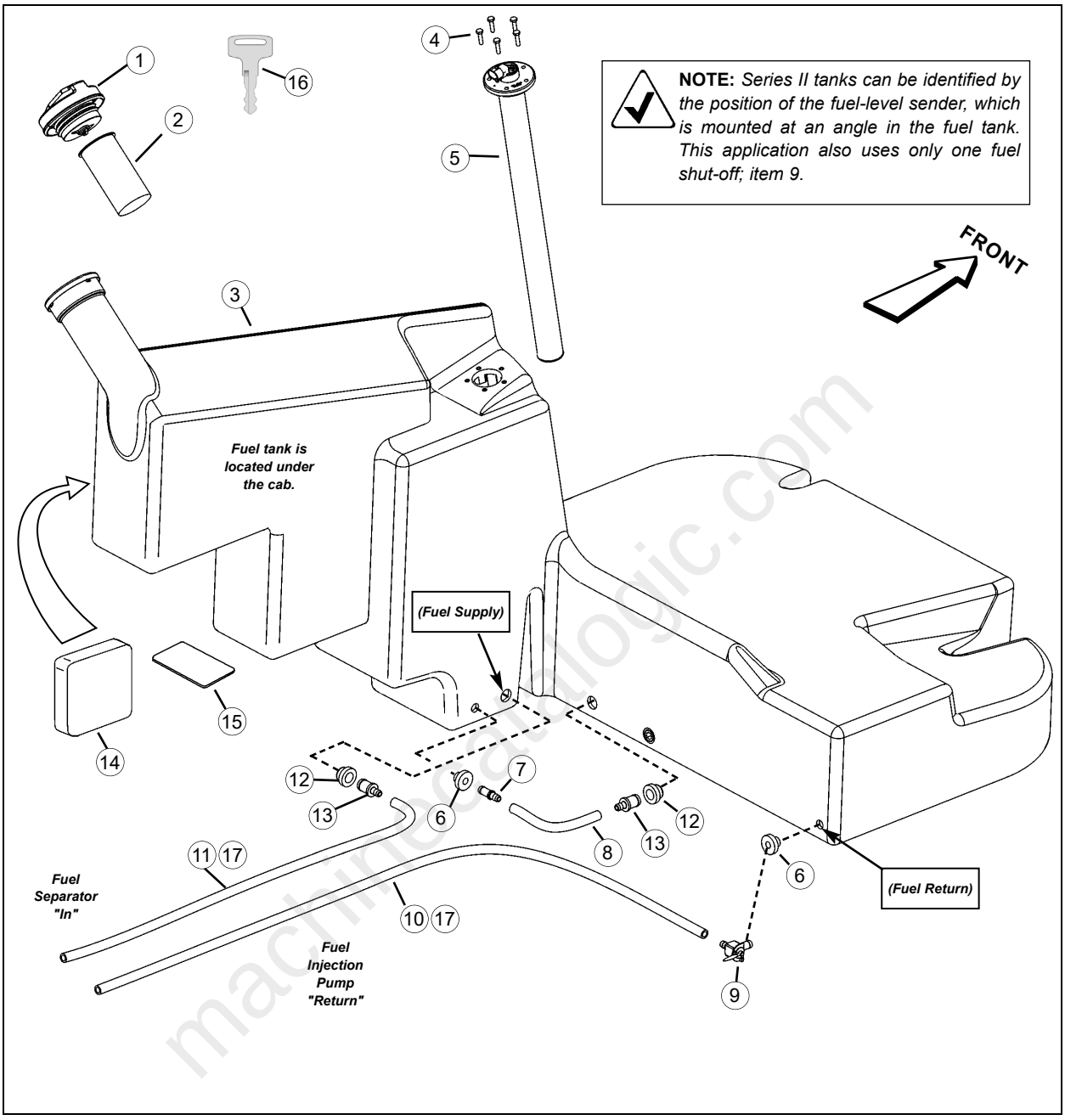

Item No.	Part No.	Description	Qty.
01	271468	CAP, FUEL *(does not include key)*	1
02	272426	STRAINER, FUEL	1
03	50302508	TANK, FUEL	1
04	651202	MS HHM USL #10-24 x 3/4" C2ZY	5
05	271459	SENDER, FUEL LEVEL *Use Permatex® Blue sealant when installing the fuel level sender.*	1
06	073024	BUSHING, FUEL TANK	4
07	50302871	FITTING, HOSE ST 5/16	1
08	275958	HOSE, FUEL 0.31 x 8.50 IN.	1
09	273850	VALVE, FUEL SHUT-OFF 90	1

Item No.	Part No.	Description	Qty.
10	50300046	HOSE, FUEL 0.31 x 81.0 IN.	1
11	50300045	HOSE, FUEL 0.31 x 78.0 IN.	1
12	50301585	BUSHING, FUEL TANK .50	2
13	50302803	FITTING, HOSE ST 1/2" x 5/16"	2
14	50303242	FOAM PAD *(fuel tank anti-shift)*	1
15	50302205	PAD, RUBBER	1
16	50280186	KEY, 8001 (14603)	1
17	062023	CLAMP, HOSE #5 *(not shown)*	AR

machinecatalogic.com

HYDRAULIC PUMP CIRCUIT - (STANDARD HYDRAULICS)

Serial Numbers: ALL — 131001 and up

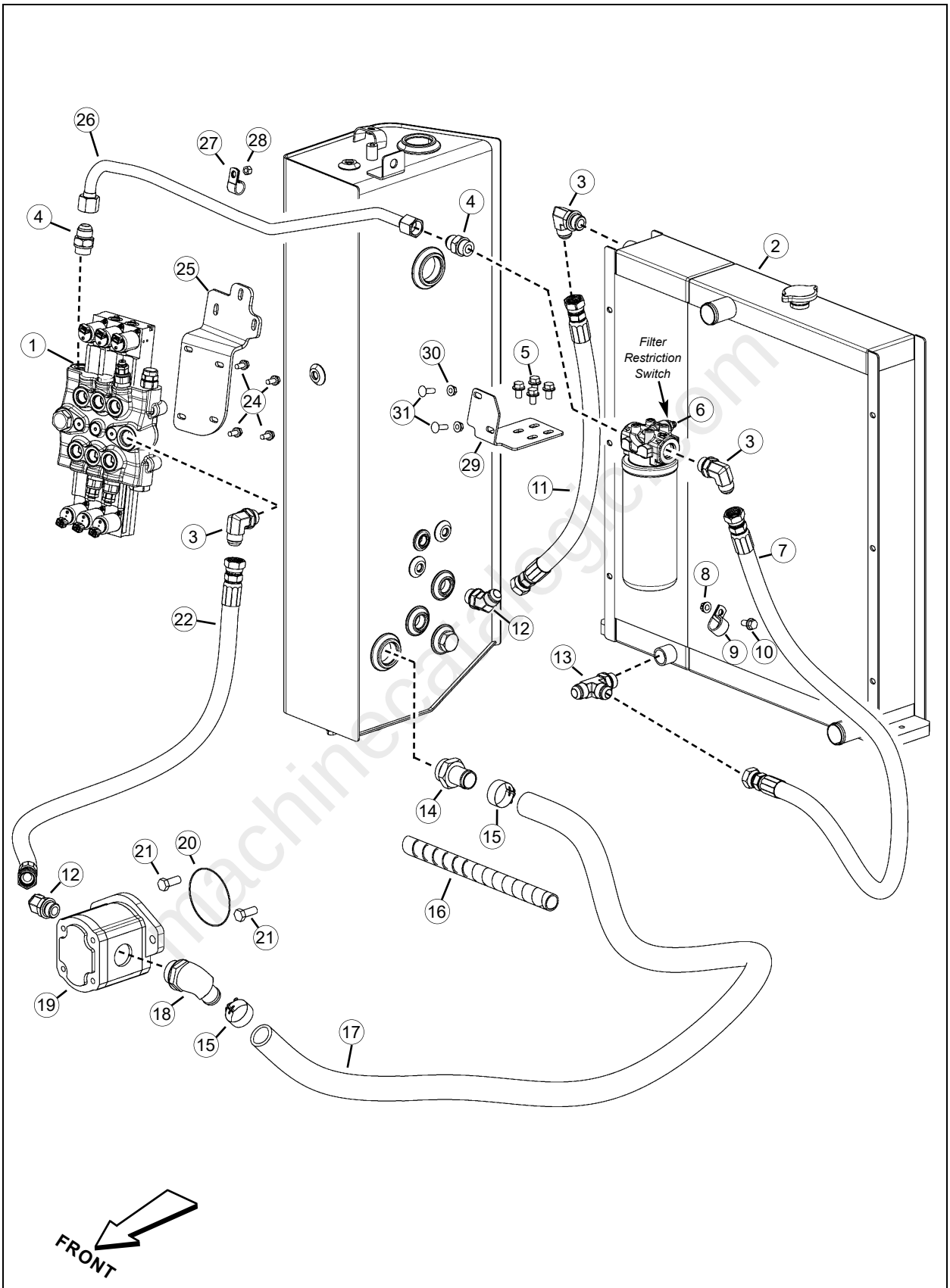

machinecatalogic.com

1750RT - HYDRAULICS

PILOT PRESSURE MANIFOLD CIRCUIT

Serial Numbers: ALL —131001 and up

HOSE CONNECTION:
#03 connects to hydraulic main valve (P) *[tee fitting]*
#05 connects to hydraulic tank *(RETURN)*
#07 connects to Hydrostatic Drive Pump *(right-side)*
#08 connects to left-side drive motor
#09 connects to left-side drive motor
#11 connects to float manifold (T)
#13 connects to right-side drive motor
#14 connects to Hydrostatic Drive Pump *(Port - D3)*
#15 connects to left-side track tension cylinder
#16 connects to left-side track tension cylinder
#18 connects to right-side track tension cylinder
#19 connects to right-side track tension cylinder
#23 connects to right-side drive motor *(park brake)*

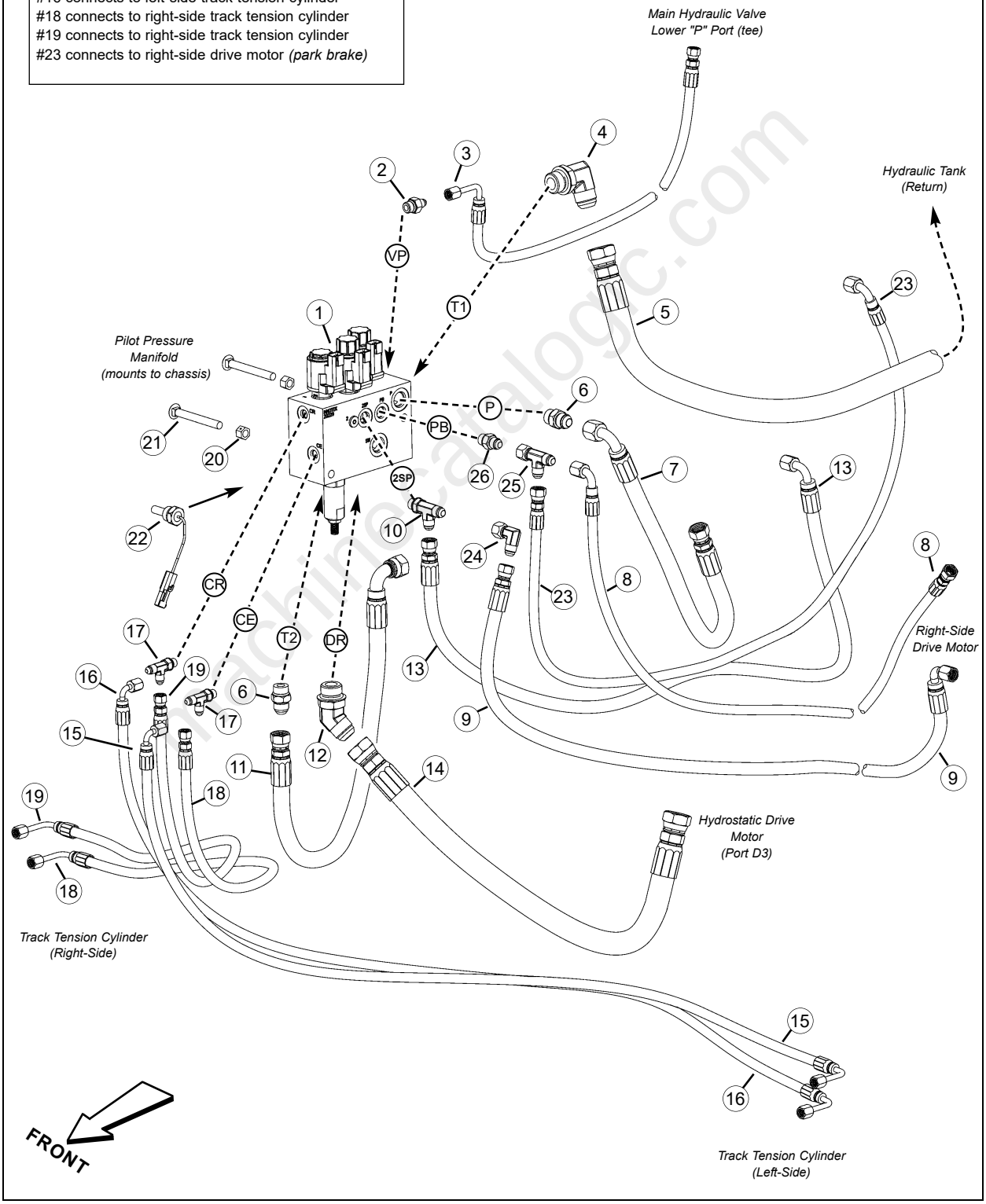

machinecatalogic.com

machinecatalogic.com

Full Version Available

Mustang 1750RT, 1750RT NXT2 and 1750RT NXT3 Compact Track Loader Parts Manual (50960115D)

Mustang 1750RT, 1750RT NXT2, NXT3 compact track loader parts manual 50960115 Rev. D: filters, cab, idlers, decals, kits. Instant PDF download.

VIEW THE FULL MANUAL

Publication No.: 50960115 (Rev. D) · Language: English · Edition: February 2019