

MUSTANG®

2040
MUSTANG SKID STEER LOADER

PARTS MANUAL

PART #015-10968 Revision B
Revised June 2008

machinecatalogic.com

MUSTANG®
Mustang Manufacturing Company, Inc.
A GEHL Company

Printed in U.S.A.

Mustang 2040 Skid Steer Loader Parts Manual (015-10968B)

Document type: Parts Manual (illustrated parts catalogue with part numbers)

Brand: Mustang

Models: 2040

Machine: Skid Steer Loader

Publication No.: 015-10968 (Rev. B)

Edition date: June 2008

Language: English

Main contents

- Frame and Lift Arm Components
- Drive System
- Hydraulics Plumbing System
- Engine Components and Electrical
- Engine (Yanmar)
- Decals & Tires
- Attachments
- Numerical Parts Listing

machinecatalogic.com

Sample pages follow. Full manual: machinecatalogic.com

LIFT ARM

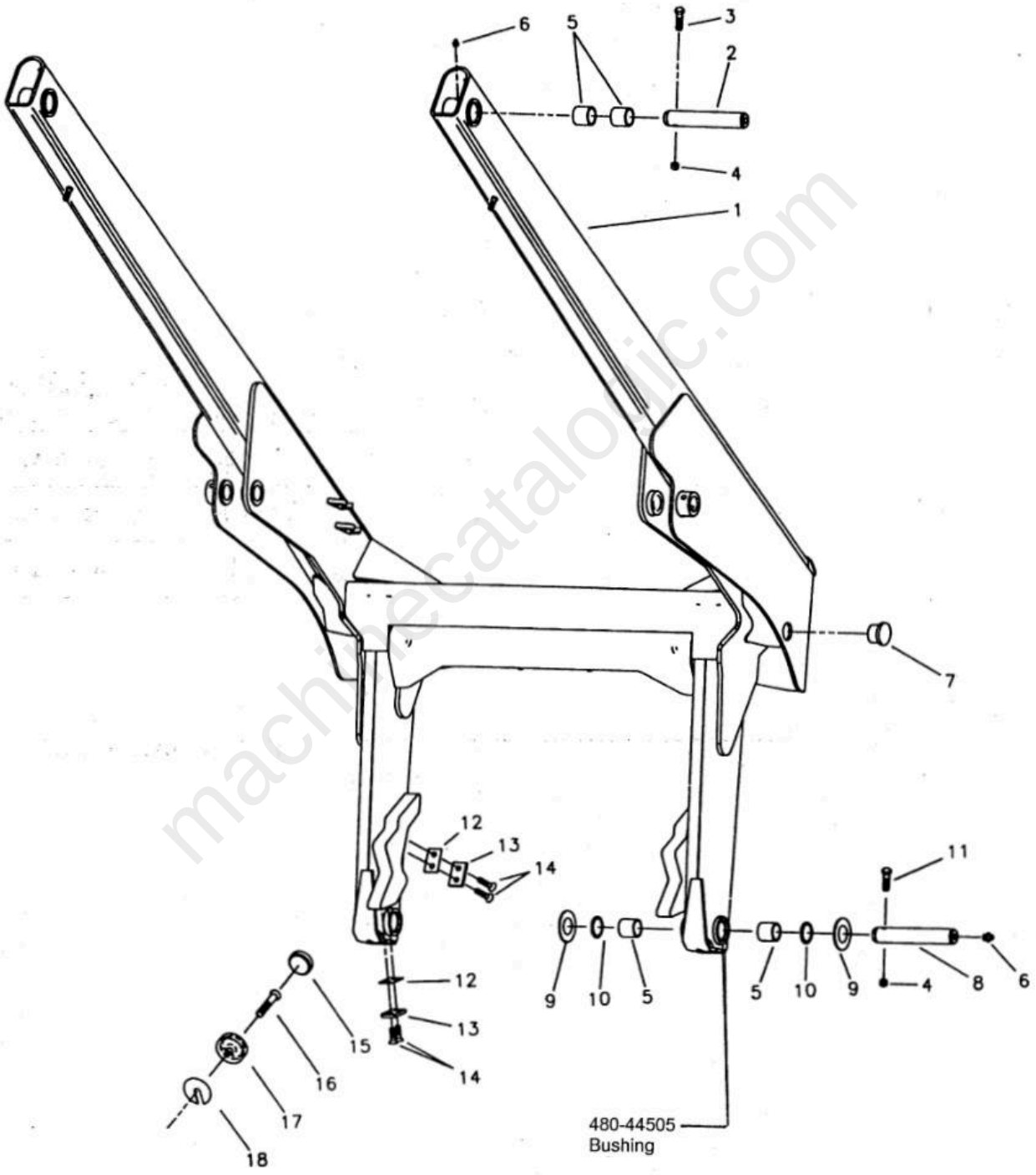

machinecatalogic.com

HYDROSTATIC MOUNT AND LINKAGE

REF	QTY	PART NUMBER	DESCRIPTION
1	1	250-32577	Flexible Drive Plate
2	8	310-32470	Screw, Cap M8 - 1.25 x 12mm
3	1	160-32740	Pump Mounting Plate
4	6	310-32478	Screw, Cap M10 - 1.50 x 25mm
5	8	400-10548	Washer, Lock 7/16
6	1	040-33646	Bracket, Control Mounting R.H.
7	2	310-32641	Screw, Cap M10 - 1.50 x 30mm
8	2	246-26431	Neutral Start and Centering Assembly
9	4	420-33388	Rubber Mount
10	2	310-32622	Screw, Cap 3/8-16NC x 1 3/8
11	6	400-20715	Washer, Flat 1 1/4 O.D.
12	2	170-34590	Shock Absorber
13	2	310-19538	Screw, Cap 3/8-16NC x 1 3/4
14	8	400-32554	Washer, Special
15	2	240-32079	Arm, Pump
16	2	310-20812	Screw, Cap 3/8-16NC x 2 1/4
17	6	210-11247	Nut, Hex, Centerlock 3/8-16NC
18	2	480-32835	Bushing
19	5	400-13676	Washer, Special
20	1	040-33647	Bracket, Control Mounting L.H.
21	2	310-25580	Screw, Cap 1/2-13NC x 1
22	2	400-20677	Washer, Lock 1/2
23	2	310-20812	Screw, Cap 3/8-16NC x 2 ¼
24	2	180-17865	Key, Woodruff 1/4 x 3/4
25	2	350-21286	Snap Ring
26	2	310-32653	Screw, Cap, Flanged 1/2-13NC x 1 1/2
27	2	400-20676	Washer, Flat
28	2	400-18916	Washer, Flat 3/8
29	2	200-32658	Rod End Male (Not Part of Item 8)
30	2	200-32245	Rod End
31	4	210-11128	Nut, Hex 3/8-24NF
32	2	200-32668	Turnbuckle
33	2	210-32134	Nut, Hex 3/8-24NF L.H. Thread
34	1	290-32580	Steering Rod (Short)
35	1	290-32530	Steering Rod (Long)
36	2	200-32396	Rod End, Female with Stud
37	4	310-32655	Screw, Cap, Special 3/8-16NC x 2 1/4
38	2	210-15190	Nut, Hex, Centerlock 3/8-24NF

mechanicalogic.com

TILT RELIEF CARTRIDGE

REF	QTY	PART NUMBER	DESCRIPTION
	1	170-34729	RP10-ACC Relief Cartridge
1	1	See Kit	O-Ring Seal
2	1	See Kit	Back-Up Ring
3	1	See Kit	O-Ring Seal
	1	190-32842	Seal Kit, Consist of Items 1-3

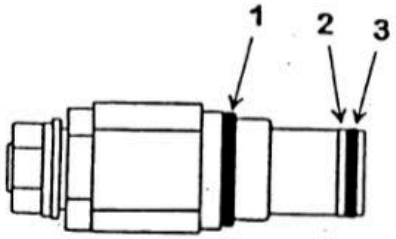

SPOOL LOCK KIT

REF	QTY	PART NUMBER	DESCRIPTION
	1	170-34702	Spool Lock Kit, Consist of Items 1-7
1	1	170-34617	Solenoid, OBSOLETE (Prior to Serial SF99M003334 and Update Not Completed, Order Kit 190-32930; Contact Service Dept. For Details - Reference Service Bulletin 2040-22)
		170-35068	Solenoid, Starting Serial #SF99M003334 (Note: New Solenoid Has One Green and One Black Wire)
2	1	Not Serviced	Bonnet
3	4	Not Serviced	Screw
4	1	Not Serviced	O-Ring Seal
5	1	Not Serviced	Wiper
6	1	360-32661	Spacer
7	1	Not Serviced	Plate

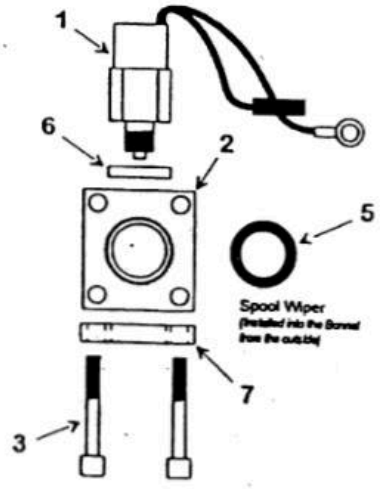

machinecatalogic.com

ENGINE, RADIATOR, & OIL COOLER, MOUNTS

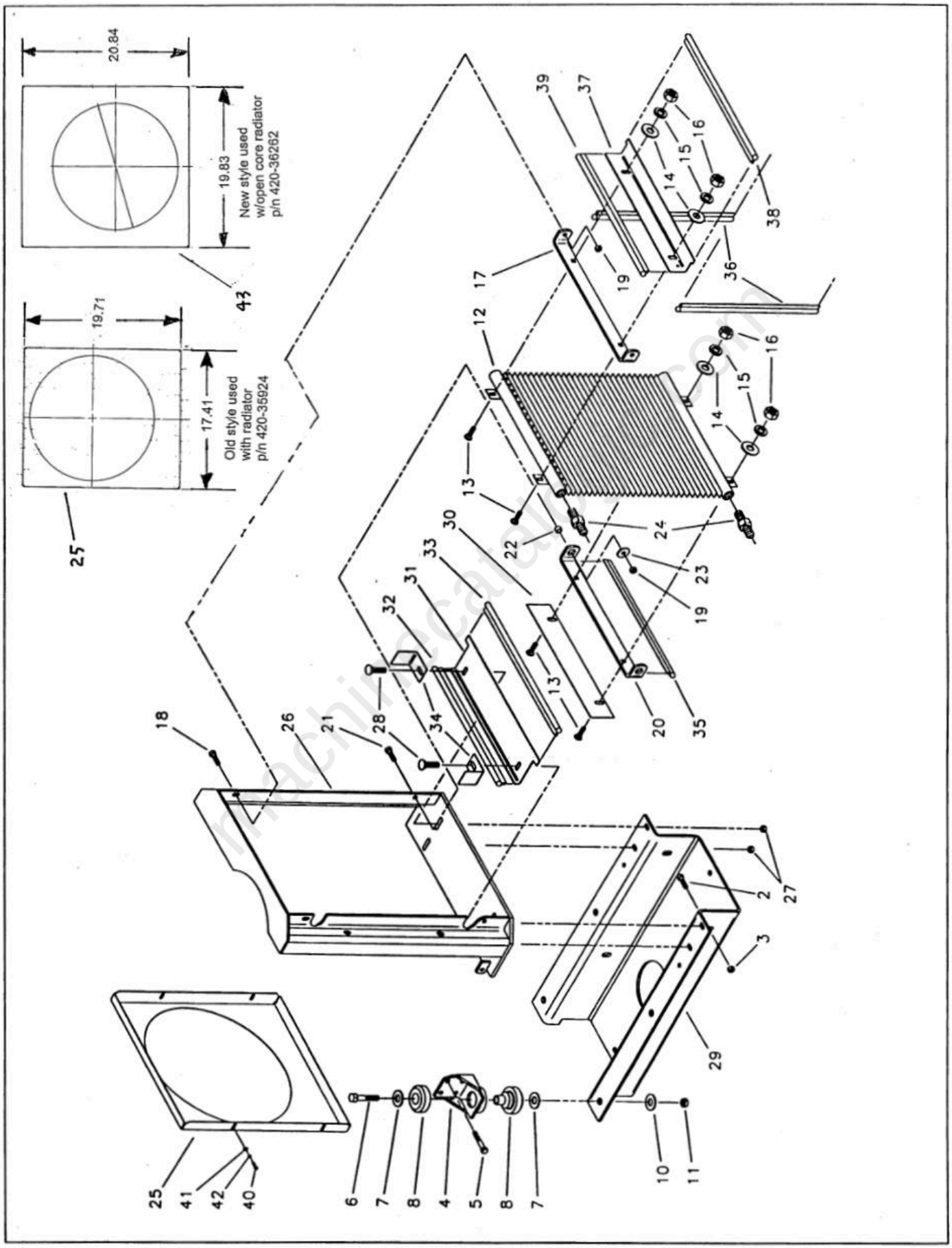

CAMSHAFT & DRIVING GEAR

REF	QTY	PART NUMBER	DESCRIPTION
1	8	425-34808	Tappet
2	8	425-34809	Rod, Push
3	1	425-34806	Camshaft Assembly
4	1	425-34656	Bearing, Thrust
5	1	Not Serviced	Camshaft
6	1	425-34807	Gear, Camshaft
7	1	425-34810	Key 7 x 14
8	1	425-34811	Shaft, Idle Gear
9	1	425-34812	Gear w/Bush
10	1	Not Serviced	Gear, Idle
11	1	Not Serviced	Bush, Idle Gear
12	1	425-34813	Bush, Idle Gear
13	2	425-34747	Bolt M 8 x 45 Plated
14	1	425-34901	Gear, Fuel Injected Pump Prior To Serial #SF99G003162
15	1	425-34902	Washer 12, Spring
16	1	210-32084	Nut M 12
32		425-34733	Bolt M 8 x 16 Plated
14	1	425-36186	Gear, Fuel Injection Pump, Start Serial #SF99G003162

machinecatalogic.com

STARTING MOTOR

REF	QTY	PART NUMBER	DESCRIPTION
1	1	425-35508	Starting Motor
2	1	425-35891	Armature Assembly
3	1	425-35892	Ball Bearing
4	1	425-35893	Ball Bearing (2)
5	1	425-35894	Washer Kit, Thrust
6	1	Not Serviced	Washer, Thrust 1
7	1	Not Serviced	Washer, Thrust 2
8	1	Not Serviced	Washer, Thrust 3
9	1	Not Serviced	Washer, Thrust 4
10	1	425-35895	Stopper Kit, Pinion
11	1	Not Serviced	Stopper, Pinion
12	1	Not Serviced	Clip, Pinion Stopper
13	1	Not Serviced	Coil Assembly, Field
14	1	Not Serviced	Coil Assembly, Field
15	2	Not Serviced	Brush (+)
16	1	425-35896	Coil Assembly, Field
17	4	425-35897	Screw, Pole Core
18	2	425-35898	Brush (+)
19	1	425-35899	Cover Assembly, Rear
20	1	425-35900	Bolt, Ground
21	1	425-35901	Holder
22	2	425-35902	Brush
23	4	425-35903	Spring, Brush
24	1	425-35904	Bearing Assembly, Center
25	1	425-35905	Seal, Oil
26	1	425-35975	Bearing, Needle
27	1	425-35906	Shaft Assembly, Gear
28	1	Not Serviced	Inner
29	1	425-35907	Pinion Assembly
30	1	425-35908	Switch, Magnetic
31	1	425-35909	Case Assembly, Gear
32	1	425-35910	Metal, Gear Case
33	1	425-35911	Lever Set, Shift
34	1	Not Serviced	Lever, Shift
35	1	Not Serviced	Pin, Shift Lever
36	1	425-35912	Dust Cover Set
37	1	Not Serviced	Cover (1, Dust)
38	1	Not Serviced	Cover (2, Dust)
39	1	Not Serviced	Cover (3, Dust)
40	2	425-35913	Bolt, Through
41	2	425-35915	Screw 4
42	1	425-35916	Terminal Cover
43	3	425-35165	Bolt M 6 x 30 Plated
44	2	425-35176	Bolt M 6 x 45 Plated
45	2	425-35914	Bolt M 5 x 12
46	2	425-35000	Bolt M 12 x 25 Plated

partscatalogic.com

REAR VIEW MIRROR

REF	QTY	PART NUMBER	DESCRIPTION
1	1	040-33383	Bracket
2	2	650448	Screw Cap 1/4-20NC x 3/4
3	2	210-19469	Nut Hex Whizlock 1/4-20NC
4	1	420-33166	Mirror

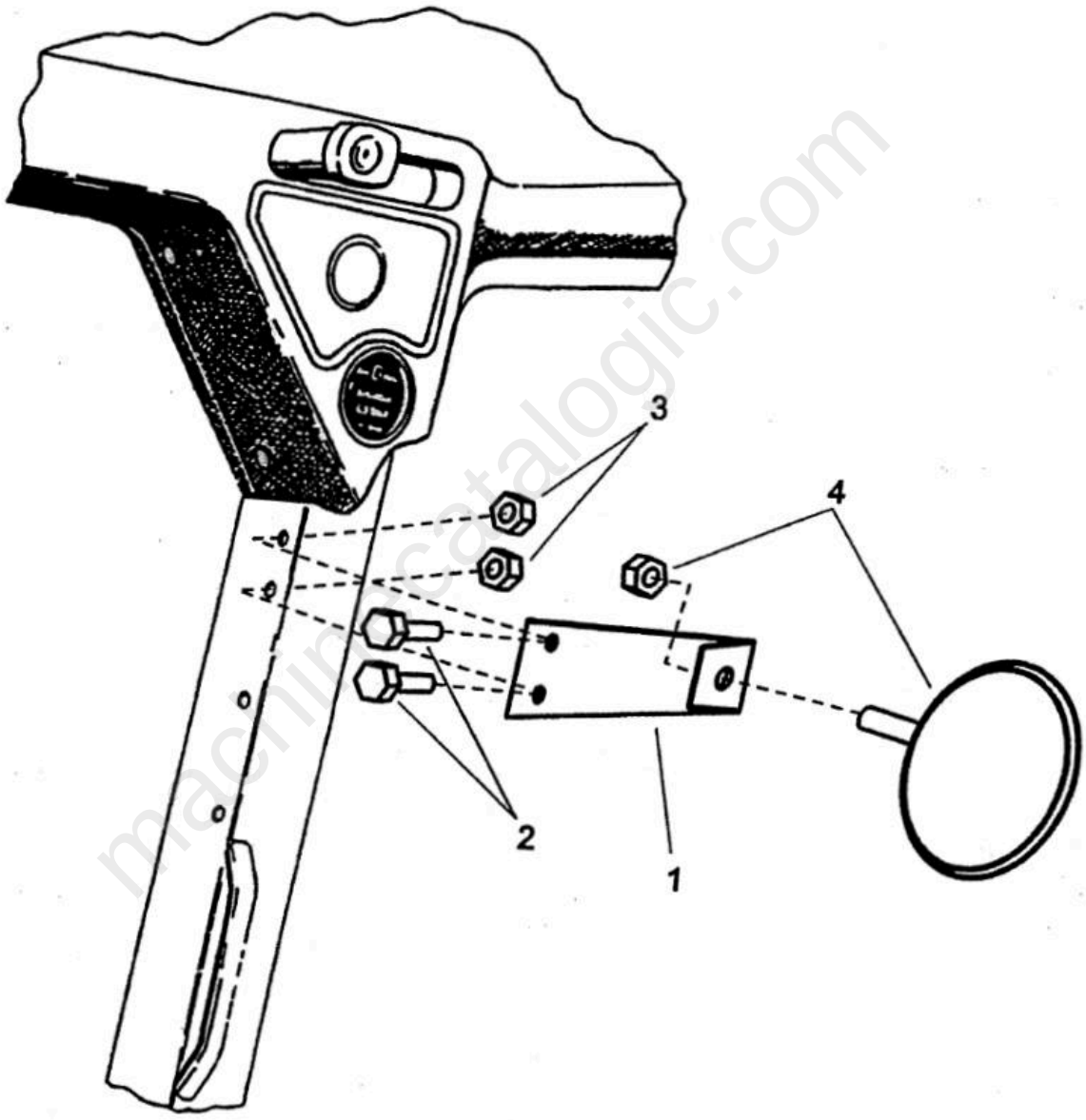

machinecatalogic.com

PART NO.	ITEM	PG.	PART NO.	ITEM	PG.	PART NO.	ITEM	PG.	PART NO.	ITEM	PG.
335-32227	40	33	370-32184	37	21	400-18916	18	7	420-16024	8	117
350-21286	25	25	380-32235	1	43	400-18916	19	27	420-18137	20	117
350-27267	11	5	380-32296	35	7	400-18916	8	30	420-18138	10	30
350-27267	24	45	380-32317	38	33	400-18916	3	55	420-18138	18	45
350-27267	10	47	380-32325	13	35	400-18916	14	65	420-18160	21	67
350-27267	3	49	380-32343	31	35	400-18916	23	65	420-18351	6	11
350-32228	7	115	380-32356	6	42	400-18917	19	7	420-18351	18	57
350-32240	4	21	380-32358	4	13	400-18917	10	29	420-18351	8	117
350-32288	26	33	380-32379	11	43	400-18917	15	65	420-18352	16	56
350-32311	14	115	380-32382	6	17	400-20676	27	25	420-18757	22	17
350-32312	11	115	380-32382	7	19	400-20677	6	7	420-18757	10	19
350-32313	9	115	380-32384	24	33	400-20677	22	25	420-19498	32	127
350-32314	8	115	380-32390	7	30	400-20677	28	25	420-19522	8	53
350-32372	4	33	380-32406	31	7	400-20715	11	25	420-19522	18	67
350-32373	27	33	380-32407	21	15	400-21033	10	17	420-20293	12	69
350-32421	24	47	390-15909	9	49	400-21033	13	19	420-21679	26	5
350-32422	29	45	390-15909	8	51	400-21568	7	65	420-21748	4	89
350-32422	15	51	390-15909	19	53	400-30803	29	13	420-21748	8	89
350-32423	3	5	390-15909	26	117	400-30803	20	17	420-23622	3	106
350-32423	6	53	390-32593	2	111	400-32242	25	69	420-23622	4	106
350-32423	13	117	390-32593	16	118	400-32273	5	118	420-23622	4	106
350-32424	5	45	390-32593	7	119	400-32315	2	121	420-26361	4	67
350-32424	18	47	390-32717	9	13	400-32320	12	115	420-28290		104
350-32424	13	49	390-32718	33	13	400-32412	9	11	420-28457	17	67
350-32424	2	51	390-32720	36	7	400-32412	23	51	420-28888	19	127
350-32424	14	53	390-32767	26	125	400-32430	31	9	420-30823	28	13
350-32424	12	55	390-32773	33	69	400-32430	18	23	420-31591	22	5
350-32426	10	45	390-32794	30	65	400-32430	41	65	420-31591	3	61
350-32428	20	45	390-32795	31	65	400-32436	12	61	420-31591	6	69
350-32443	32	35	390-32796	37	65	400-32476	24	69	420-31591	11	123
350-32484	14	21	400-10019	42	65	400-32477	5	21	420-32535		105
350-32499	41	31	400-10020	12	118	400-32478	5	21	420-32623	33	9
350-32499	22	45	400-10091	22	113	400-32491	21	21	420-32623	31	27
350-32502	9	17	400-10093	20	33	400-32493	10	65	420-32958	6	69
350-32502	11	19	400-10548	5	25	400-32496	11	30	420-32958	14	113
350-32506	12	21	400-10548	9	69	400-32504	5	21	420-32969	3	117
350-32523	6	30	400-10610	26	7	400-32505	16	123	420-33048	37	7
350-32564	9	23	400-10610	40	15	400-32506	11	127	420-33337	29	67
350-32565	27	23	400-10610	11	17	400-32532	17	31	420-33344	1	106
350-32565	42	35	400-10610	14	19	410-21412	4	106	420-33388	9	25
360-32423	11	33	400-10683	28	61	410-21683	1	106	420-33451	5	30
360-32521	35	35	400-13676	19	25	410-32278	3	106	420-33527	9	129
360-32582	7	125	400-14024	4	118	410-32338	4	106	420-33614	21	127
360-32583	15	127	400-18911	7	15	410-32346	1	106	420-33614	4	129
360-32585	39	21	400-18911	14	25	410-32414	4	106	420-33711	6	89
360-32594	13	11	400-18911	5	69	410-32415	4	106	420-34016	8	65
360-32597	12	11	400-18911	12	89	410-32416	4	106	420-34058	15	61
360-32598	17	11	400-18912	8	67	410-32431	3	106	420-34114	23	9
360-32599	18	11	400-18912	4	69	410-32438	4	106	420-34304	24	27
370-32036	19	21	400-18912	11	89	410-32439	4	106	420-34304	17	59
370-32182	7	23	400-18916	32	5	420-13731	17	7	420-34304	10	129

machinecatalog.com

machinecatalogic.com

Full Version Available

Mustang 2040 Skid Steer Loader Parts Manual (015-10968B)

Mustang 2040 skid steer loader parts manual 015-10968 Rev. B: engine, hydraulics, cab, frame and decals parts lists. Instant PDF download.

VIEW THE FULL MANUAL

https://machinecatalogic.com/mustang-2040-skid-steer-loader-parts-manual-015-10968b/

Publication No.: 015-10968 (Rev. B) · Language: English · Edition: June 2008