2044
2044 (EU)
2054
2054 (EU)

SKID-STEER LOADER

PARTS MANUAL

PART #917027

Revision F - 05/07

Mustang Manufacturing Company, Inc.

machinecatalogic.com

Mustang 2044 and 2054 Skid Steer Loader Parts Manual (917027F)

Document type: Parts Manual (illustrated parts catalogue with part numbers)

Brand: Mustang

Models: 2044 and 2054

Machine: Skid Steer Loader

Publication No.: 917027 (Rev. F)

Edition date: May 2007

Language: English

Main contents

- SECTION A: MAIN LOADER COMPONENTS
- Mainframe
- Wheel Drives
- Engine and Engine Controls
- Fuel System
- Muffler/Exhaust
- Air Cleaner and Water Bottle
- Cooler Water System
- Brake System
- Hydrostatic Mount and Linkage
- Hydrostatic Plumbing
- Charge, Cooler and Return Filter Plumbing
- Auxiliary Circuit Plumbing
- Tilt Circuit Plumbing
- Lift Circuit Plumbing
- High Flow Plumbing
- Self-Leveling Valve Plumbing
- Foot Pedal Control and Cabin Panel
- Steering Controls
- Lift Arm
- Attachment System
- ROPS/FOPS
- Seat, Seat Mounting and Restraint Bar
- Rear Door and Engine Cover
- Electrical - Tail Lights
- Electrical - Brakes
- Electrical - Instrument Panel
- Tires
- Sound Suppression
- Decals
- Lift Cylinder
- Tilt Cylinder
- Drive Motor and Parking Brake

machinecatalogic.com

Sample pages follow. Full manual: machinecatalogic.com

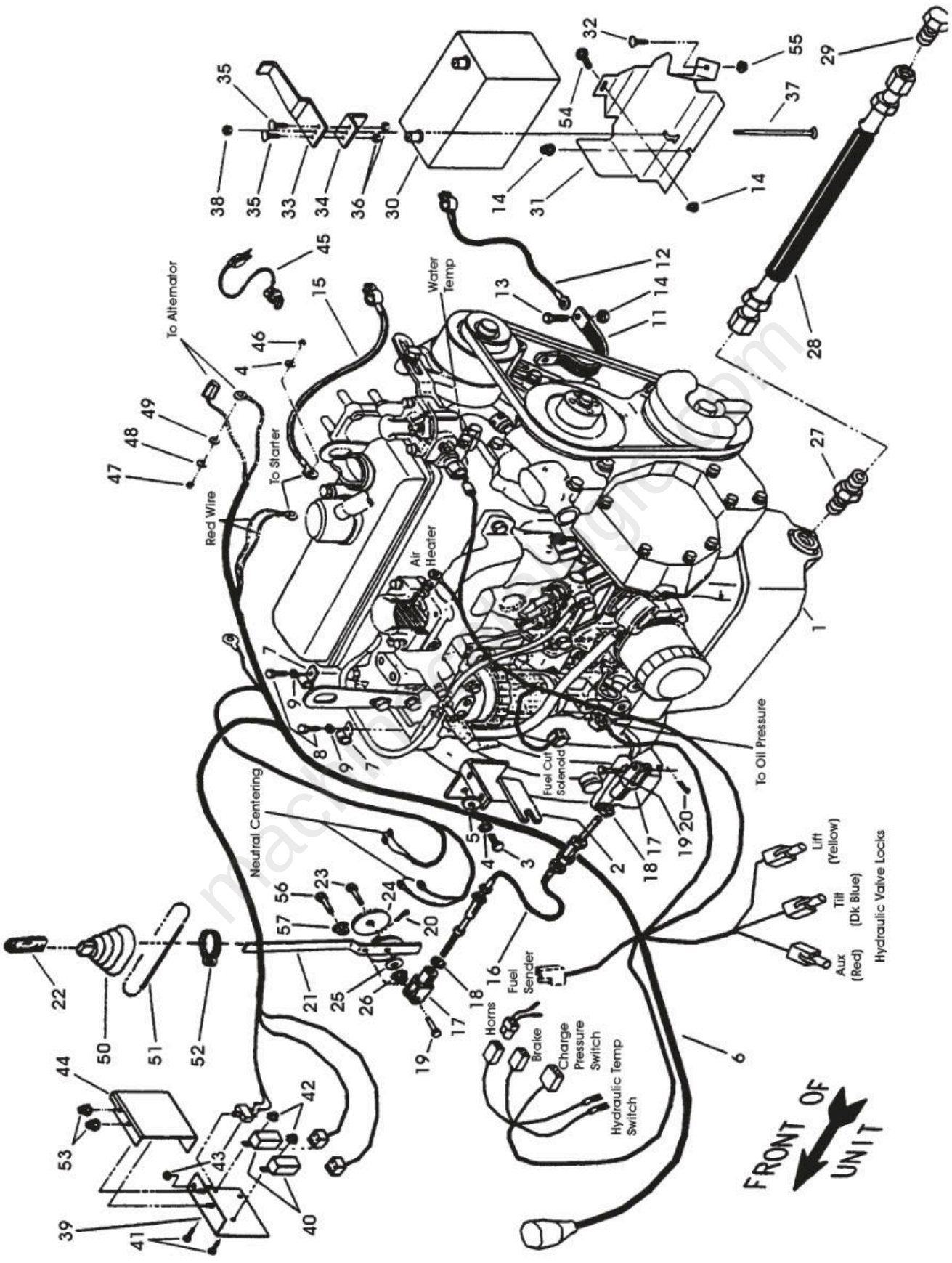
To Alternator
Red Wire
To Starter
Water Temp
Air Heater
Neutral Centering
Fuel Cut Solenoid
To Oil Pressure
Fuel Sender
Horns
Brake
Charge Pressure Switch
Hydraulic Temp Switch
Lift (Yellow)
Tilt (Dk Blue)
Aux (Red)
Hydraulic Valve Locks
FRONT OF UNIT

Ref. No.	Part No.	Description	Quantity 2044/2054
1	420-36164	HARNESS/WIRE	1
2	137602	CONNECTOR/12 V POWER PORT/STANDARD	1
3	137603	COVER	1
4	420-34148	PLUG	1
5	129310	SOCKET/ELECTRICAL OPTIONAL	1

machinecatalogic.com

Ref. No.	Part No.	Description	Quantity 2044	Quantity 2054
	170-34676	VALVE/CONTROL	1	-
	170-34848	VALVE/CONTROL	-	1
1	170-34725	POSITIONER/FLOAT	1	1
2	170-34726	POSITIONER/SPOOL	1	1
3	170-32727	POSITIONER/R DETENT	1	1
4	170-34728	CARTRIDGE/RELIEF RCM	1	-
	170-34875	CARTRIDGE/RELIEF RCM	-	1
5	170-34729	CARTRIDGE/RELIEF RP10-AAC	1	1
6	230-32703	PLUG/LOAD CHECK	3	3
7	170-34702	KIT/SPOOL LOCK	3	3
8	190-32843	KIT/SEAL SPOOL	1	1
9	131577	PLUG	3	3
10	040-33635	BRACKET/VALVE MOUNTING	1	1
11	650704	BOLT/CARRIAGE 3/8-16NC X 1	4	4
12	070856	NUT/HEX WHIZLOCK 3/8-16NC	4	4
13	174911B	BRACKET/CABLE MOUNT	1	1
	040-33636A	BRACKET/CABLE MOUNT	1	1
14	310-32643	SCREW/CAP 7/16-14NC X 6	2	2
15	071705	NUT/HEX CENTERLOCK 7/16-14NC	2	2
16	654006	WASHER/FLAT 3/8	2	2
17	650985	SCREW/SELF-TAPPING 5/16-18NC X 3/4	1	1
18	654002	WASHER/FLAT 1/4	1	1
19	420-35612	DECAL/VALVE SECTION IDENTIFICATION	1	1
20	420-35682	TIE/CABLE YELLOW	1	1
21	420-35680	TIE/CABLE BLUE	1	1
22	420-35681	TIE/CABLE RED	1	1

A) 2044: SN P4300 AND BEFORE. 2054: SN V6800 AND BEFORE
B) 2044: SN P4301 AND UP. 2054: SN V6801 AND UP

PRESSURE SETTINGS	AMOUNT OF PRESSURE
CONTROL VALVE RELIEF - 2044	2350+150/-0 PSI @ Full Throttle (162+10,3/-0,0 bar)
CONTROL VALVE RELIEF - 2054	2800+150/-0 PSI @ Full Throttle (193+10,3/-0,0 bar)

machinecatalogic.com

Ref. No.	Part No.	Description	Quantity 2044 (IMER)	Quantity 2044/2054
	170-34994	VALVE/BRAKE SOLENOID COMPLETE	1	-
	170-34948	VALVE/BRAKE SOLENOID COMPLETE	-	1
1	170-35085	VALVE/SOLENOID LESS COIL	1	-
	170-34831	VALVE/SOLENOID LESS COIL	-	1
	190-32935	KIT/SEAL (FOR ITEM 1)	1	-
	190-32865	KIT/SEAL (FOR ITEM 1)	-	1
	170-35084	COIL (FOR P/N 170-35085)	1	-
	170-34809	COIL (FOR P/N 170-34831)	-	1
2	230-32747	PLUG/HOLLOW HEX	1	1

machinecatalogic.com

Utility Fork and Grapple

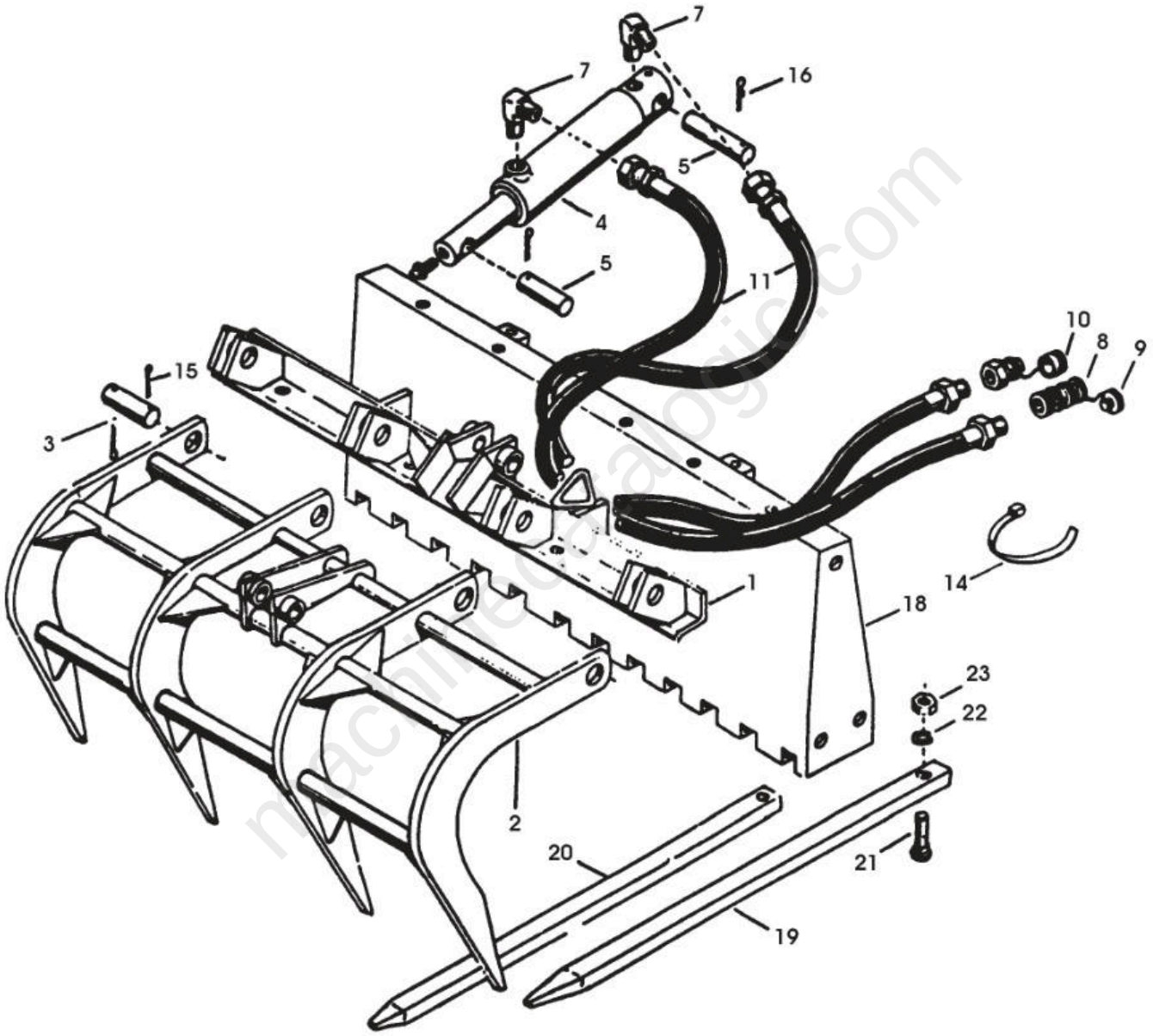

machinecatalogic.com

Part No.	Page No.	Ref. No.	Part No.	Page No.	Ref. No.	Part No.	Page No.	Ref. No.	Part No.	Page No.	Ref. No.
420-36280	242	1	425-34653	174	2	425-34721	160	5	425-34749	162	22
420-36281	214	32	425-34653	196	11	425-34722	160	6	425-34750	162	12
420-36282	214	31	425-34656	168	4	425-34723	160	10	425-34750	162	13
420-36292	74	39	425-34659	170	27	425-34724	160	11	425-34750	196	23
420-36292	84	4	425-34660	170	28	425-34725	160	12	425-34751	162	24
420-36293	104	51	425-34662	24	2	425-34726	160	13	425-34754	164	2
420-36293	254	41	425-34666	188	9	425-34727	160	22	425-34756	164	3
420-36294	103	40	425-34667	188	13	425-34727	176	36	425-34757	164	15
420-36295	103	39	425-34668	186	79	425-34727	176	37	425-34759	164	17
420-36296	103	40	425-34673	162	5	425-34727	196	27	425-34760	164	18
420-36297	103	39	425-34674	188	29	425-34728	160	21	425-34761	164	19
420-36304	78	1	425-34677	180	31	425-34728	172	3	425-34761	172	4
420-36306	103	8	425-34678	180	24	425-34728	178	12	425-34761	176	20
420-36307	103	8	425-34678	184	2	425-34729	160	23	425-34763	162	25
420-36318	103	36	425-34679	186	75	425-34729	162	16	425-34763	196	30
420-36319	103	37	425-34680	180	51	425-34730	160	7	425-34764	164	10
420-36320	103	36	425-34681	162	11	425-34731	160	18	425-34765	164	12
420-36321	103	37	425-34681	196	4	425-34732	160	14	425-34765	166	39
420-36322	86	1	425-34683	178	33	425-34733	160	35	425-34766	166	40
420-36323	86	4	425-34684	176	28	425-34733	162	17	425-34766	194	28
420-36324	86	7	425-34686	24	5	425-34733	162	18	425-34767	166	48
420-36330	86	2	425-34688	178	25	425-34733	164	11	425-34768	166	45
420-36332	100	27	425-34689	166	47	425-34733	166	50	425-34769	166	44
420-36333	238	9	425-34689	196	8	425-34733	168	32	425-34770	166	49
420-36355	258	14	425-34690	166	18	425-34733	176	44	425-34770	196	34
420-36356	258	15	425-34690	196	13	425-34733	178	24	425-34771	166	1
420-36361	222	1	425-34693	170	11	425-34734	160	29	425-34772	162	10
420-36362	222	1	425-34694	170	14	425-34735	160	32	425-34774	166	41
420-36364	90	13	425-34695	164	1	425-34737	162	3	425-34775	166	51
420-36373	216	33	425-34695	164	14	425-34738	162	1	425-34776	166	52
420-36375	78	49	425-34695	170	2	425-34739	162	2	425-34776	196	31
425-21772	162	26	425-34698	170	23	425-34740	162	6	425-34777	178	1
425-32478	164	4	425-34699	170	26	425-34740	166	42	425-34779	166	12
425-34635	176	23	425-34701	176	39	425-34741	162	7	425-34780	166	11
425-34636	190	4	425-34701	196	14	425-34742	162	8	425-34781	166	25
425-34638	160	27	425-34703	178	14	425-34742	196	3	425-34782	166	20
425-34639	166	14	425-34703	196	17	425-34743	162	9	425-34783	166	24
425-34640	166	13	425-34704	178	17	425-34744	162	14	425-34784	166	26
425-34641	166	9	425-34704	196	18	425-34744	176	26	425-34785	166	30
425-34642	166	7	425-34705	178	19	425-34744	190	11	425-34787	166	27
425-34643	166	15	425-34705	196	19	425-34744	196	32	425-34788	166	28
425-34644	166	16	425-34707	178	32	425-34745	162	15	425-34789	166	29
425-34645	166	19	425-34707	196	28	425-34745	166	43	425-34790	166	33
425-34645	196	5	425-34709	180	28	425-34745	196	33	425-34791	166	36
425-34646	166	17	425-34710	180	30	425-34746	162	19	425-34792	166	34
425-34647	166	21	425-34711	180	46	425-34746	176	27	425-34793	166	37
425-34647	196	6	425-34712	182	73	425-34746	178	21	425-34794	166	38
425-34649	172	7	425-34713	182	97	425-34747	162	20	425-34795	166	23
425-34649	196	9	425-34714	182	96	425-34747	164	13	425-34796	166	22
425-34651	172	2	425-34714	196	35	425-34747	168	13	425-34796	196	7
425-34651	196	10	425-34721	160	4	425-34748	162	21	425-34797	166	3

marinecatalogic.com

Full Version Available

Mustang 2044 and 2054 Skid Steer Loader Parts Manual (917027F)

Mustang 2044 and 2054 skid steer loader parts manual 917027F: engine, hydraulics, electrical, cab, decals, attachments. Instant PDF download.

VIEW THE FULL MANUAL

https://machinecatalogic.com/mustang-2044-and-2054-skid-steer-loader-parts-manual-917027f/

Publication No.: 917027 (Rev. F) · Language: English · Edition: May 2007