

MUSTANG®

2050
MUSTANG SKID STEER LOADER

PARTS MANUAL

PART #001-48976 Revison B

Revised May 2008

machinecatalogic.com

MUSTANG®
Mustang Manufacturing Company, Inc.
A GEHL Company

Printed in U.S.A.

Mustang 2050 Skid Steer Loader Parts Manual (001-48976B)

Document type: Parts Manual (illustrated parts catalogue with part numbers)

Brand: Mustang

Models: 2050

Machine: Skid Steer Loader

Publication No.: 001-48976 (Rev. B)

Edition date: May 2008

Language: English

Main contents

- Frame and Lift Arm Components
- Main Frame
- Rear and Top Door
- Foot Pedal, Controls and Cabin Panels
- Lift Arm
- R.O.P.S. - F.O.P.S
- Seat and Seat Mounting
- Fast - A - Tach Two Pin
- Fast - A - Single Pin
- Drive System
- Chain Drive
- Axle and Housing
- Brake System
- Hydrostatic Mount and Linkage
- Dual Lever Steering
- T-Bar Steering
- Neutral Centering Device
- Gear Pump
- Hydrostatic Unit
- Hydraulic Motors
- Hydraulics Plumbing System
- Control Valve Assembly
- Main Relief Valve
- Auxiliary Detent Positioner
- Lift Float Positioner
- Tilt Spool Positioner
- Load Check Plug
- Tilt Relief Cartridge
- Spool Lock Kit
- Manifold Valve
- Self Leveling Valve
- Hydrostatic Plumbing
- Charge, Cooler and Return Filter Plumbing

machinecatalogic.com

Sample pages follow. Full manual: machinecatalogic.com

R.O.P.S. - F.O.P.S.

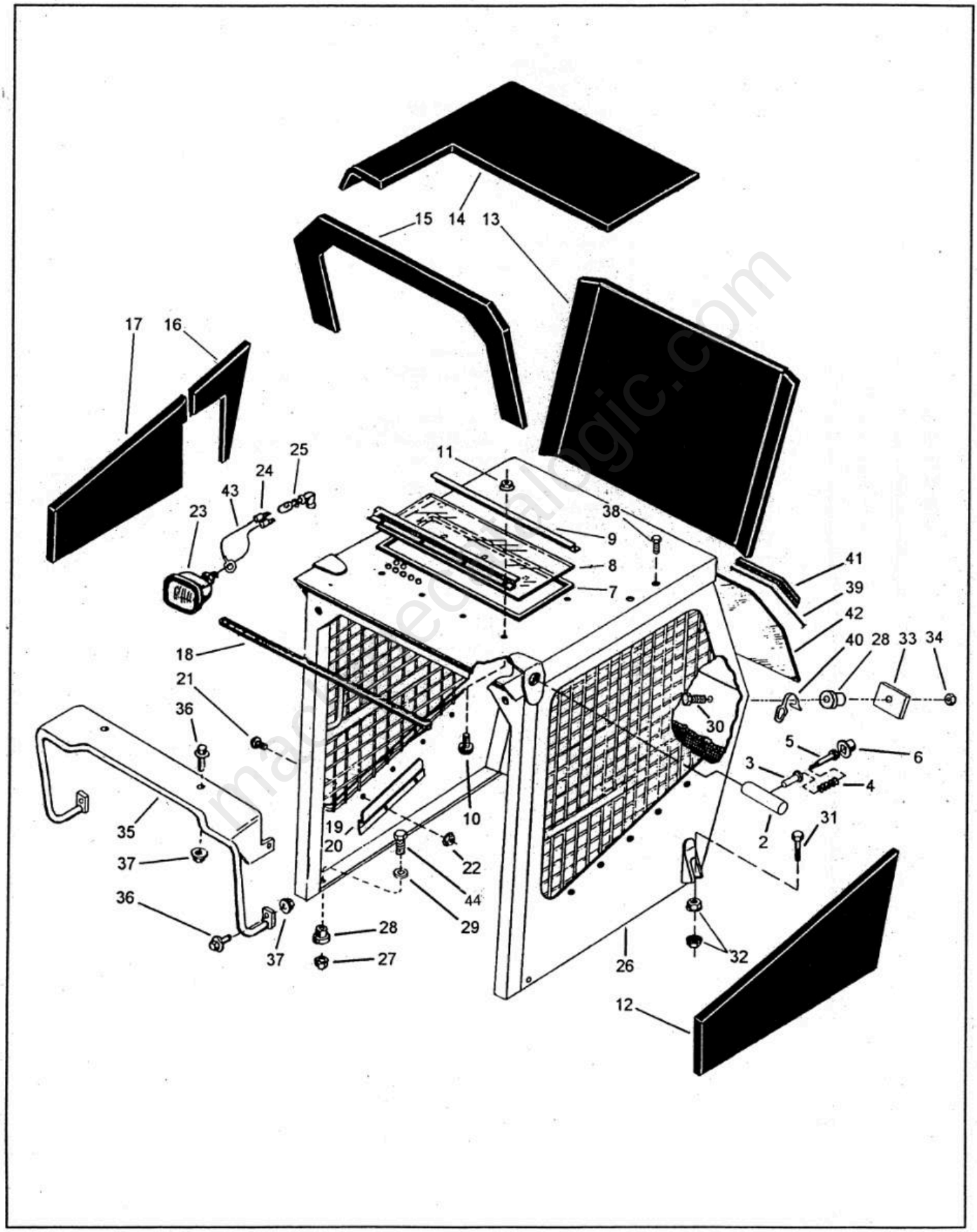

manualsecatalogic.com

SELF LEVELING VALVE

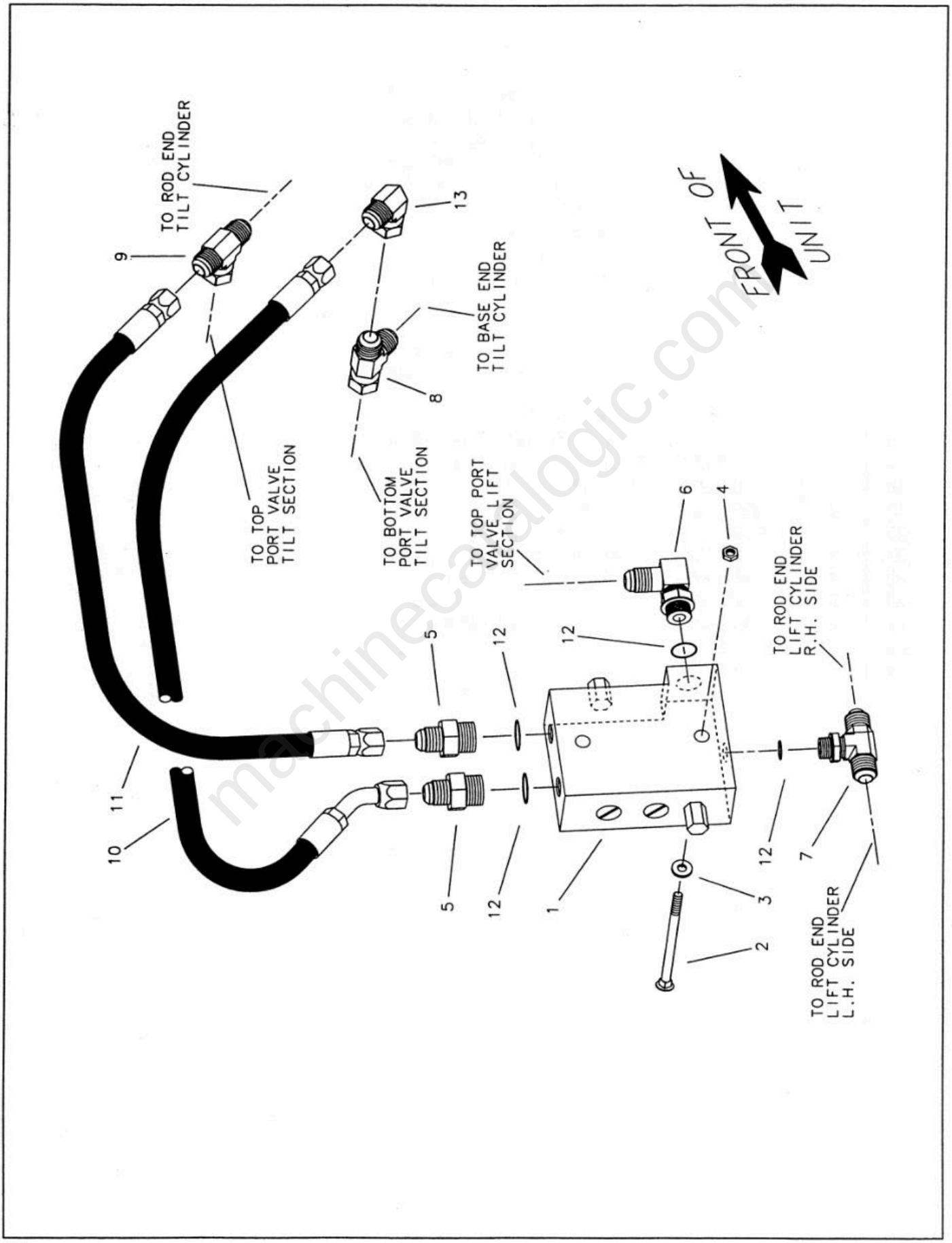

machinecatalogic.com

REAR VIEW MIRROR AND BRACKET

REF	QTY	PART NUMBER	DESCRIPTION
1	1	040-33383	Bracket, Mirror
2	2	310-11419	Screw Cap 1/4 - 20NC x 3/4
3	2	210-19469	Nut Hex Whizlock 1/4 - 20NC
4	1	420-33166	Mirror, Rear View

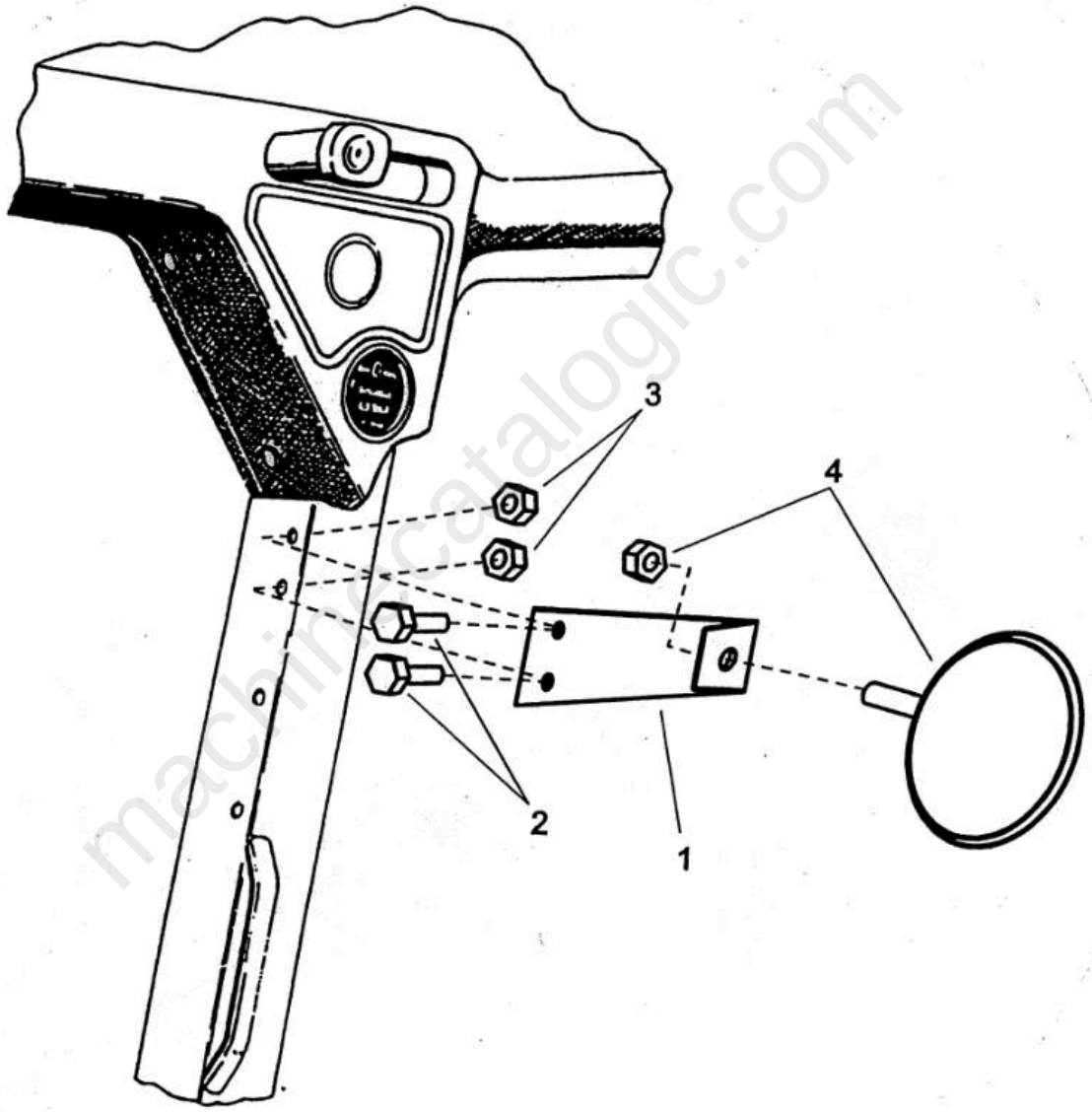

machinecatalogic.com

Full Version Available

Mustang 2050 Skid Steer Loader Parts Manual (001-48976B)

Mustang 2050 skid steer loader parts manual 001-48976 Rev. B: assembly groups, hydraulics, drive, cab, engine, decals, kits. Instant PDF download.

VIEW THE FULL MANUAL

https://machinecatalogic.com/mustang-2050-skid-steer-loader-parts-manual-001-48976b/

Publication No.: 001-48976 (Rev. B) · Language: English · Edition: May 2008