2066, 2076
2076 (EU)
2086
2086 (EU)

SKID-STEER LOADER

PARTS MANUAL

Revision H - 02/08

PART #917097

Mustang Manufacturing Company, Inc.

machinecatalogs.com

Mustang 2066, 2076 and 2086 Skid Steer Loader Parts Manual (917097H)

Document type: Parts Manual (illustrated parts catalogue with part numbers)

Brand: Mustang

Models: 2066, 2076 and 2086

Machine: Skid Steer Loader

Publication No.: 917097 (Rev. H)

Edition date: February 2008

Language: English

Main contents

- SECTION A: MAIN LOADER COMPONENTS
- Chassis
- Wheel Drives
- Engine and Remote Oil Filter Assembly
- Air Cleaner and Exhaust
- Radiator - Cooler
- Hydrostatic System - Drive Motors
- Hydraulics - Chassis
- Hydraulics - Lift Arm
- Controls - Auxiliary Hydraulics
- Controls - Lift and Tilt
- Controls - Traction
- Controls - Engine
- Lift Arm
- Fast-A-Tach and Powered Fast-A-Tach Attachment Bracket
- ROPS and Interior
- Seat and Seat Belts
- Restraint Bar
- Grille and Engine Covers
- Electrical - Chassis
- Electrical - ROPS
- Electrical - Lights
- Electrical - Engine
- Electrical - Control
- Sound Suppression
- Control Covers
- Tires
- Decals
- Lift Cylinder
- Tilt Cylinder
- Drive Motors - Single and Two-Speed
- Tandem Pump
- Gear Pump - Single

machinecatalogic.com

Naturally Aspirated Engine

2066 Models: SN 005000 and Before

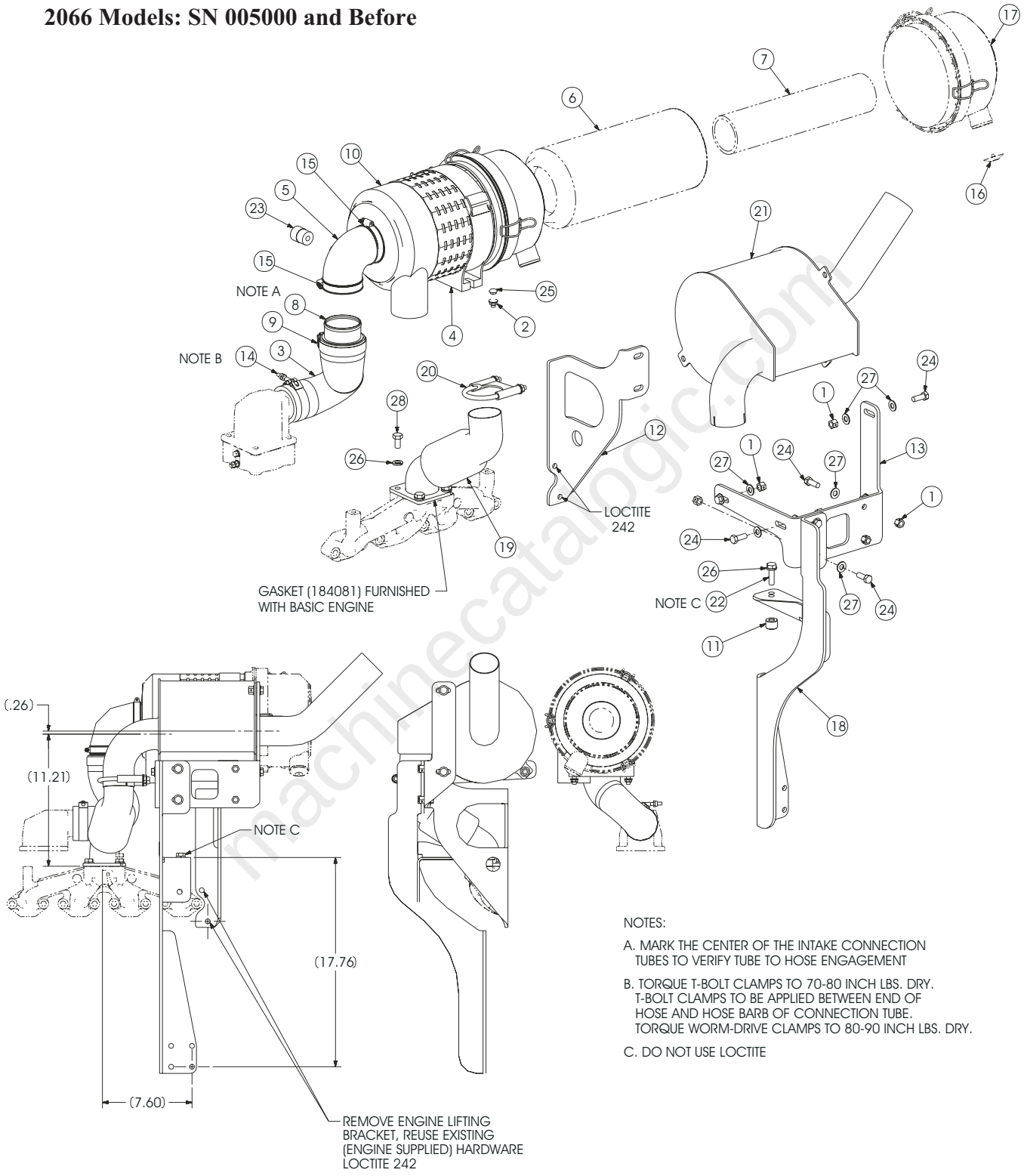

NOTES:

A. MARK THE CENTER OF THE INTAKE CONNECTION TUBES TO VERIFY TUBE TO HOSE ENGAGEMENT

B. TORQUE T-BOLT CLAMPS TO 70-80 INCH LBS. DRY. T-BOLT CLAMPS TO BE APPLIED BETWEEN END OF HOSE AND HOSE BARB OF CONNECTION TUBE. TORQUE WORM-DRIVE CLAMPS TO 80-90 INCH LBS. DRY.

C. DO NOT USE LOCTITE

184049

machinecatalogic.com

Ref. No.	Part No.	Description	Two-Speed Qty. 2086 Dual Joystick
1	054626	FITTING/STRAIGHT SAE08 X JIC08	4
2	054820	FITTING/TEE SAE06 X JIC06 X JIC06	1
3	054994	FITTING/STRAIGHT SAE06 X JIC06	1
4	055064	FITTING/45° SAE12 X JIC12	1
5	055981	FITTING/TEE JIC06 X SAE06 X JIC06	1
6	068938	FITTING/90° SAE06 X JIC06	1
7	076879	CAP/37° FLARE 3/4	1
8	079092	FITTING/TEE SAE12 X JIC12 X JIC12	1
9	080556	CAP/37° FLARE 9/16	1
10	087393	FITTING/TEE SAE06 X JIC06 X JIC06	2
11	089099	FITTING/STRAIGHT SAE10 X JIC08	2
12	121773	FITTING/45° SAE16 X JIC12	1
13	121775	FITTING/90° SAE12 X JIC08	1
14	131842	NUT/SPIRALOCK™ 5/16	2
15	131859	HOSE/VERY HIGH PRESSURE 3/4 X 28	1
16	132049	SWITCH/TEMPERATURE	1
17	134588	NUT/SPIRALOCK™ 1/4	2
18	135773	WASHER/HARDENED FLAT 5/8	12
19	135928	FITTING/STRAIGHT SAE12 X FF12	7
	137205	O-RING	1
20	139438	SCREW/CAP HEX FLANGE 3/8 X 5/8	1
21	183978a	MANIFOLD/VALVE	1
22	184363a	MANIFOLD/HYDRAGLIDE	1
23	184415	ACCUMULATOR	1
24	184470	TUBE ASSEMBLY/DRAIN RIGHT MOTOR	1
25	184499	HOSE/MEDIUM PRESSURE 1/2 X 22	1
26	184843	PLATE/SPACER (VALVE)	1
27	184946	MANIFOLD/HYDRAULIC RETURN	1
28	190488a	PUMP/TANDEM	1
29	190539	TUBE/CHARGE	1
30	193674a	MOTOR/TWO-SPEED RIGHT	1
31	193675a	MOTOR/TWO-SPEED LEFT	1
32	193773	TUBE/TWO-SPEED LEFT	1
33	193776	TUBE/TWO-SPEED RIGHT	1
34	193974	TUBE/DRAIN LEFT MOTOR	1
35	194004	HOSE/CHARGE INLET	1
36	194052	TUBE/BRAKE LEFT	1
37	194059	TUBE/BRAKE RIGHT	1
38	194082	HOSE/HIGH PRESSURE 3/4 X 26-5/16	1
39	194118	FITTING/STRAIGHT SAE12 X FF12 LONG	1
	137205	O-RING	1
40	194120	HOSE/HIGH PRESSURE 3/4 X 26-1/2	1
41	194121	HOSE/HIGH PRESSURE 3/4 X 29-3/8	1
42	194126	HOSE/MEDIUM PRESSURE 3/8 X 26	1
43	194178	FITTING/90° 8MB-8HB	1
44	194180	FITTING/90° 6MB-6HB	1
45	194208	TUBE/CASE DRAIN	1
46	194209	TUBE/BRAKE LEFT	1
47	194210	HOSE/HIGH PRESSURE 3/8 X 28-1/2	1
48	194211	HOSE/DRAIN 3/8 X 19-1/2	1
49	194212	HOSE/DRAIN 1/2 X 27	1
50	194545	TUBE/HYDRAGLIDE	1
51	194546	TUBE/HYDRAGLIDE	1
52	195148	HOSE/HIGH PRESURE 3/4 X 26-5/8	1
53	230-24749	FITTING/STRAIGHT SAE08 X JIC06	4
	055898	O-RING	1
54	650453	SCREW/CAP 1/2 X 1-1/2	2
55	650979	SCREW/CAP 1/4 X 3-1/4	2
56	651620	SCREW/CAP SOCKET HEAD M16 X 2MM X 30MM	12
57	651712	BOLT/CARRIAGE 5/16 X 3	2
58	L570021	CLAMP/HOSE SAE08	4
59	P471548	WASHER/HARDENED FLAT 1/2	2

a) For breakdown see “Section B” of this manual.

mowercatalogic.com

Ref. No.	Part No.	Description	Quantity
1	045-31438	BUSHING	4
2	067847	NUT/HEX 3/8	2
3	071703	NUT/LOCK 3/8	2
4	079209	NUT/HEX 3/8	1
5	089079d	PIN/KLIK	1
	220-32679c	PIN/LYNCH W/ CHAIN	1
6	131443	SHIM	AR
7	131913d	BUMPER	1
8	188056b	PIN/GREASE-FREE	2
	135301a	PIN	2
9	188036	LIFT ARM SUPPORT	1
10	188772	LIFT ARM	1
11	188934	PLUG/HOLE	2
12	210-19470d	NUT/HEX WHIZLOCK 5/16	2
13	220-32576	PIN/PIVOT	2
14	335-32256	SEAL	4
15	400-32468	WASHER/SPECIAL	AR
16	570002	FITTING/GREASE	4
17	650490	SCREW/CAP 3/8 X 1	4
18	650731	SCREW/CAP 3/8 X 3-1/2	2
19	650818	SCREW/CAP 3/8 X 3	2
20	650483	SCREW/CAP 3/4 X 5-1/2	1
21	654026	WASHER/LOCK 3/8	4
22	310-32656	SCREW/CAP 3/8 X 1-1/4	4
23	360-32594	WEAR PLATE/ROLLBACK STOP	2
24	360-32597	SHIM/WEAR PLATE	AR
25	310-32626c	SCREW/BUTTON HEAD SOCKET 3/8	4
26	330-33625c	COVER/QUICK COUPLING	2
27	087854c	PAD/ARM BRACE	1
28	139731	BUSHING	4

a) Pin that takes a grease zerk (P/N 570002) and requires lubricating grease for maintenance (older-style).
b) A grease less pin that requires no grease zerk or lubricating grease for maintenance (newer-style).
c) 2066: SN 005000 and Before. 2076: SN 004200 and Before. 2086: SN 003100 and Before
d) 2066: SN 005001 and Up. 2076: SN 004201 and Up. 2086: SN 003101 and Up

machine-catalogic.com

Ref. No.	Part No.	Description	Quantity
1	055648	TIE/WIRE	2
2	070636	GROMMET	3
3	070648	NUT/SERRATED LOCK 5/16	1
4	072340	GAUGE/HOURMETER	1
5	073036	SWITCH/LIGHT	1
6	076058	RELAY	2
7	088040	HOUSING/DISPLAY	2
8	090-32441	SWITCH/GLOW PLUG	1
9	128007	CLAMP/TUBE	1
10	128738	BULB/LAMP	9
11	130064	GASKET/LAMP HOUSING	2
12	137602	CONNECTOR 12 V POWER PORT	1
13	137603	COVER 12 V POWER PORT	1
14	137749	SWITCH/PARK BRAKE	1
15	137753	MODULE/CONTROL INTERLOCK	1
16	137795	RELAY/POWER	1
17	137797	NUT/SERRATED FLANGE #10	10
18	183634	GAUGE/FUEL LEVEL	1
19	187356	GAUGE/ENGINE TEMPERATURE/OIL	1
20	184019	BREAKER/CIRCUIT 20 A	3
21	184032	BREAKER/CIRCUIT 30 A	1
22	186850	HARNESS/INSTRUMENT PANEL	1
23	654042	WASHER/LOCK EXTERNAL TOOTH 3/8	1

machinecatalogic.com

Dual Joystick Controls

2066 Models: SN 005550 and Before

2076 Models: SN 005150 and Before

2086 Models: SN 003850 and Before

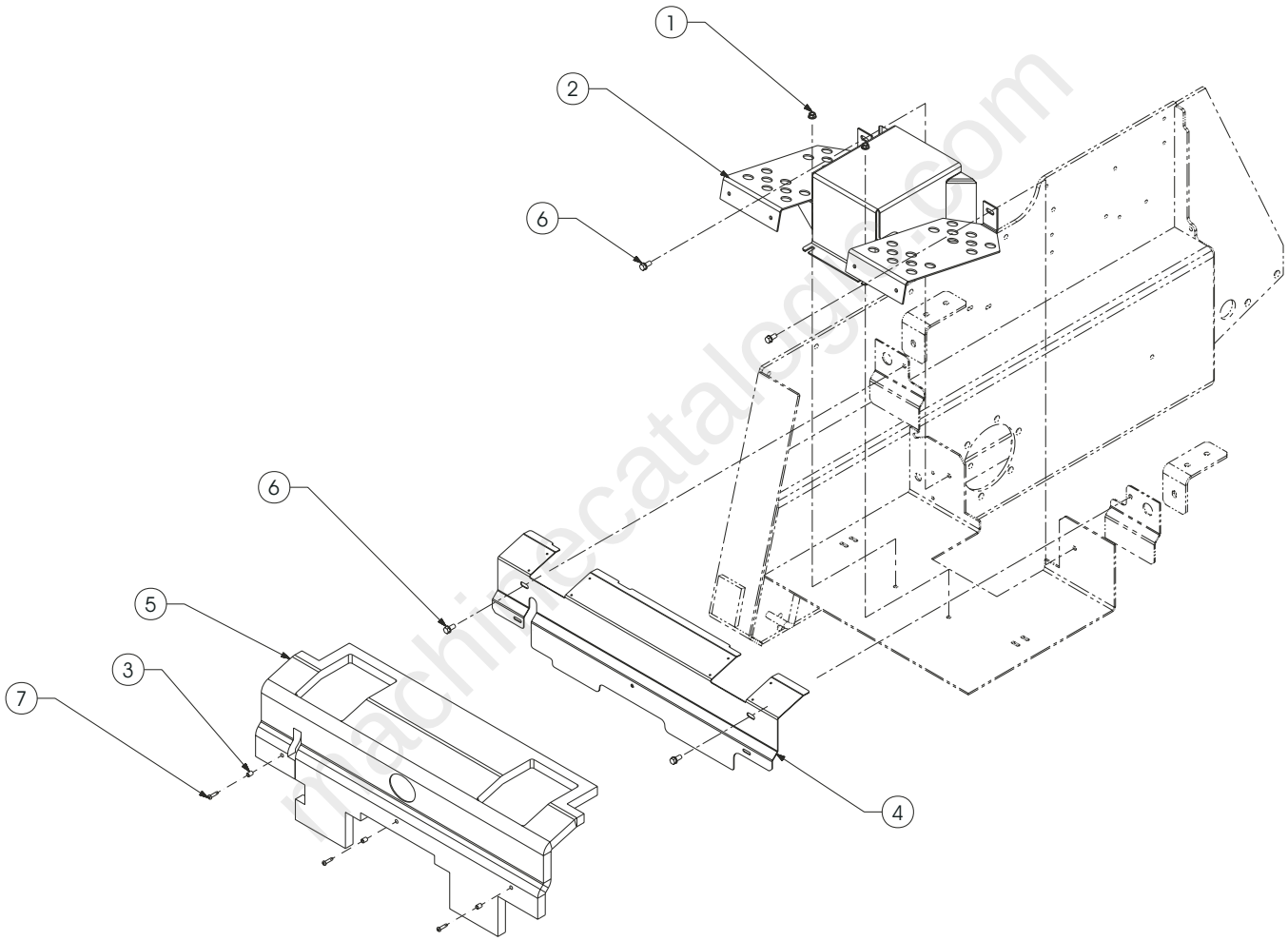

190877_190885

SELF-LEVELING VALVE

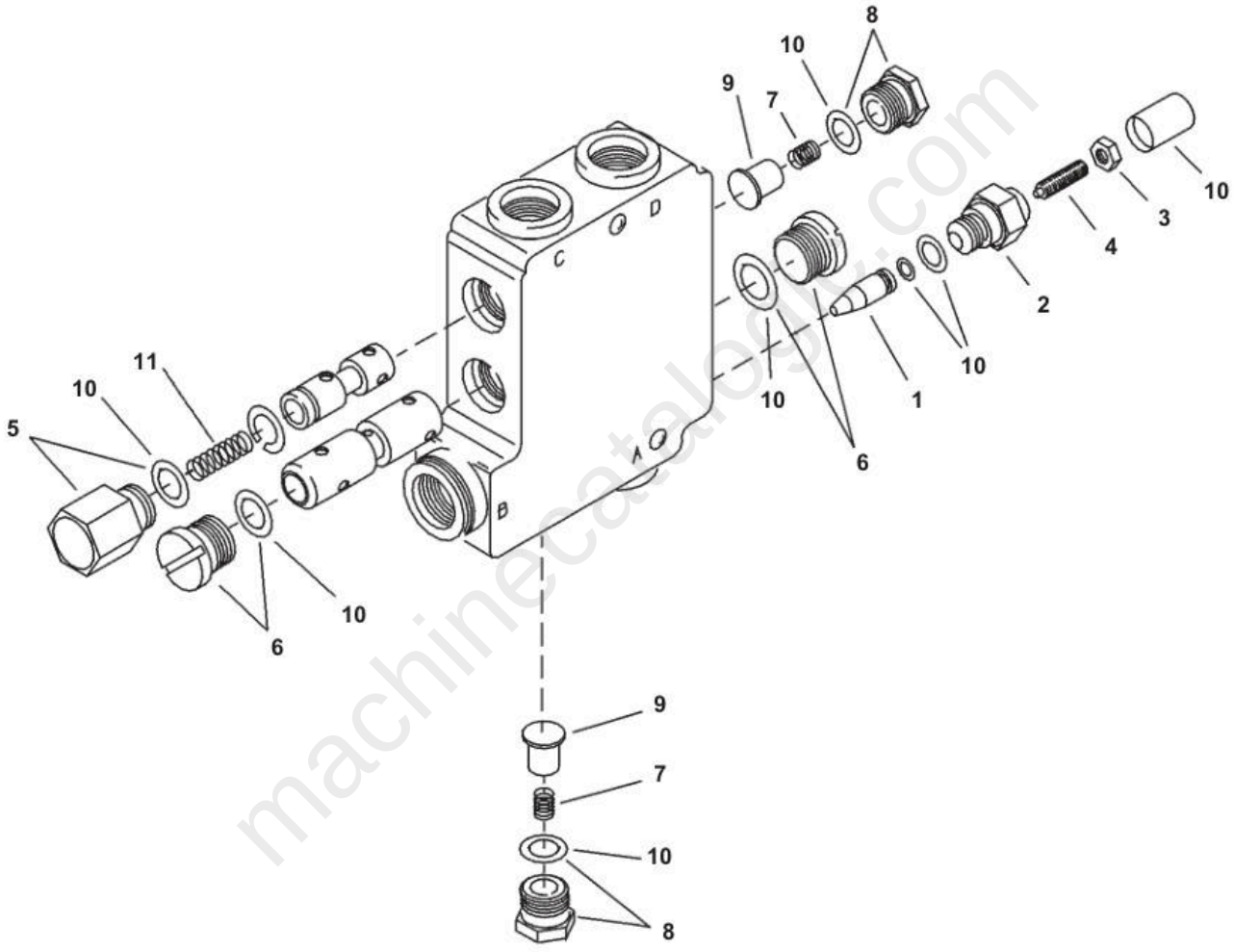

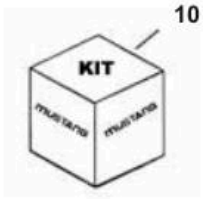

128844x.cpt

machinecatalogs.com

14-Pin Connector for Auxiliary Attachments Kit 811226

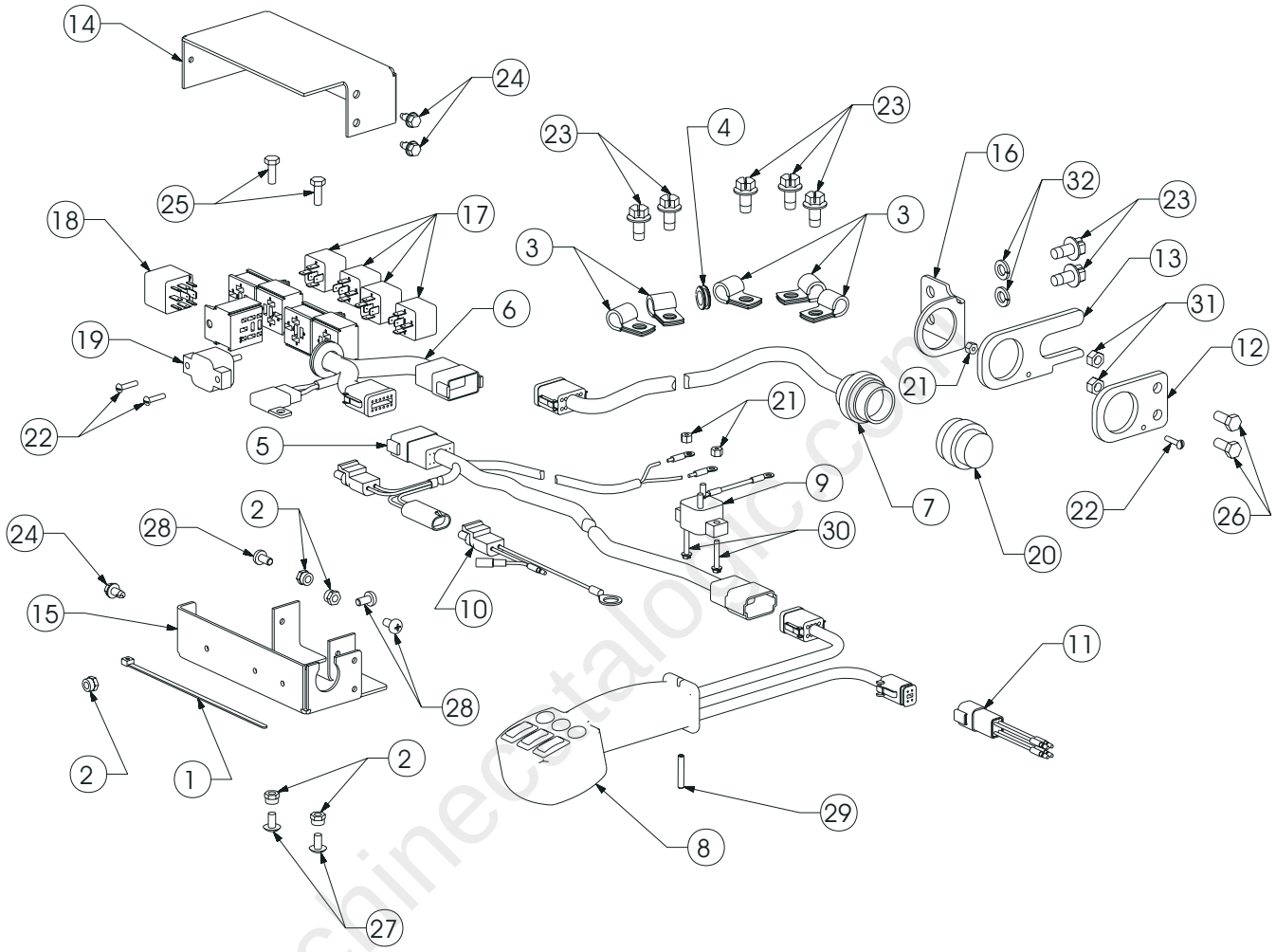

Ref. No.	Part No.	Description	Qty. Req.
1	055648	TIE/WIRE	20
2	071401	NUT/LOCK 1/4	5
3	076147	CLAMP/TUBE	5
4	138274	GROMMET/RUBBER	1
5	193828	HARNESS/14-PIN AUX	1
6	193831	HARNESS/RELAY BOX	1
7	193832	HARNESS/14-PIN CONNECTOR	1
8	193833	HANDLE/14-PIN AUX	1
9	193834	BREAKER W/ WIRE ASSY	1
10	193839	ADAPTER HARNESS/POWER	1
11	193844	ADAPTER HARNESS/HANDLE	1
12	193850	MOUNT/14-PIN CONNECTOR	1
13	193852	MOUNT/14-PIN CONNECTOR	1
14	193855	COVER/RELAY BOX	1
15	193857	CHASSIS/RELAY BOX	1
16	194136	MOUNT/14-PIN CONNECTOR	1
17	194144	RELAY	4
18	194146	DIODE BLOCK/8	1
19	194147	BREAKER 15 A	1
20	194507	DUST CAP W/ CHAIN	1
21	210-32183	NUT/HEX NYLON INSERT #8	3
22	310-32288	SCREW/ROUND #8 X 3/4	3
23	310-32411	SCREW/SELF-TAPPING 3/8 X 3/4	7
24	650315	SCREW/MACHINE 1/4 X 1	3
25	650448	SCREW/CAP 1/4 X 3/4	2
26	650486	SCREW/CAP 5/16 X 3/4	2
27	650943	SCREW/MACHINE 1/4 X 1/2	2
28	651307	SCREW/MACHINE 1/4 X 1/2	3
29	651467	PIN/ROLL M5 X 30MM	1
30	651548	SCREW/MACHINE HWH SLT #8 X 1	2
31	653007	NUT/HEX 5/16	2
32	654026	WASHER/LOCK 3/8	2

machinecatalogic.com

Full Version Available

Mustang 2066, 2076 and 2086 Skid Steer Loader Parts Manual (917097H)

Mustang 2066, 2076, 2086 skid steer loader parts manual 917097H: chassis, engine, hydraulics, electrical, cab, decals, kits. Instant PDF download.

VIEW THE FULL MANUAL

Publication No.: 917097 (Rev. H) · Language: English · Edition: February 2008