

MUSTANG

2070

MUSTANG SKID STEER LOADER

PARTS MANUAL

PART #000-23978 Revision B
Revised March 1998
Revised June 2008

machinecatalogic.com

MUSTANG®
Mustang Manufacturing Company, Inc.
A GEHL Company

Printed in U.S.A.

Mustang 2070 Skid Steer Loader Parts Manual (000-23978B)

Document type: Parts Manual (illustrated parts catalogue with part numbers)

Brand: Mustang

Models: 2070

Machine: Skid Steer Loader

Publication No.: 000-23978 (Rev. B)

Edition date: June 2008

Language: English

Main contents

- Frame and Lift Arm Components
- Drive System
- Hydraulics Plumbing System
- Engine Components and Electrical
- Attachments
- Numerical Parts Listing

machinecatalogic.com

Sample pages follow. Full manual: machinecatalogic.com

STEERING CONTROLS, HYDRO

PRIOR TO SERIAL # SG98J000686

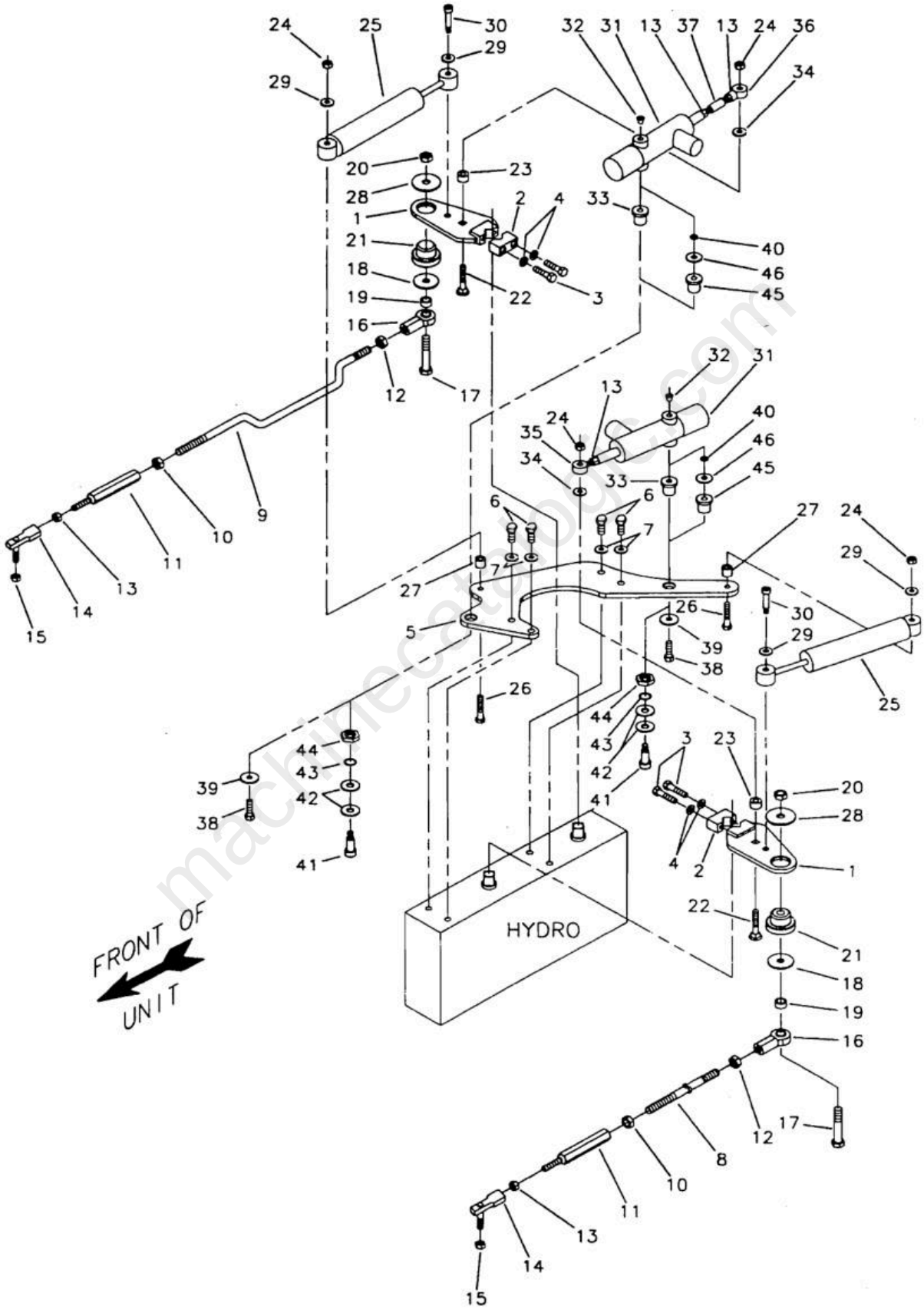

machinecatalogs.com

CHARGE, COOLER AND RETURN FILTER PLUMBING

REF	QTY	PART NUMBER	DESCRIPTION
1	1	040-33400	Bracket, Filter Mount
2	1	170-33797	Filter Base
3	7	310-19473	Screw, Cap, Whizlock 5/16-18NC x3/4
4	2	170-33635	Filter Element (Standard Hydraulics)
	1	170-34879	Filter Element (HI-FLOW Hydraulics) (Optional Heavy Duty, See Ref. 44)
5	1	230-32708	Swivel Adapter 90° 1 1/16 SAE - 1 1/16 JIC
6	2	230-18318	Connector, Straight 1 1/16 SAE - 1 1/16 JIC
7	1	230-32580	Swivel Female Side Outlet Tee 1 1/16 JIC
8	1	230-32648	Adjustable Tee 1 1/16 JIC - 1 1/16 SAE
9	2	030-20318	Bolt, Carriage 3/8-16NC x 1
10	2	210-19434	Nut, Hex Whizlock 3/8-16NC
11	2	400-18916	Washer, Flat 3/8
12	1	170-34762	Hydraulic Hose and Tube Assembly
13	1	170-34767	Hydraulic Hose and Tube Assembly
14	1	170-34764	Hydraulic Hose and Tube Assembly
15	1	230-32192	Adjustable Elbow 45° 1 1/16 SAE - 1 1/16 JIC (Standard Hydraulics)
	1	230-18316	Adjustable Elbow 90° 1 1/16 SAE - 1 1/16 JIC (HI-FLOW Hydraulics)
16	1	170-34765	Hydraulic Hose and Tube Assembly
17	1	170-34746	Return Valve Package (Replaced By 170-34861)
		170-34861	Return Valve Package
18	1	230-32657	Adjustable Elbow 90° 7/16 SAE - 9/16 JIC
19	1	230-32195	Connector, Straight 7/16 SAE - 7/16JIC
20	1	230-32394	Adjustable Elbow 90° 1 5/16 SAE - 1 5/16 JIC
21	1	230-32403	Adjustable Elbow 45° 1 5/16 SAE - 1 5/16 JIC (Standard Hydraulics)
	1	230-32692	Run Tee 1 5/16 SAE - 1 5/16 JIC (HI-FLOW Hydraulics)
22	1	090-32502	Pressure Switch
23	1	090-32164	Temperature Switch, Oil
24	1	090-32304	Temperature Sender, Oil
25	1	170-34758	Port Restrictor - Blind (SAE - 12) } Not Used With New
26	1	380-32356	Spring, Port Restrictor } Valve Block 170-34861
27	2	030-31945	Bolt, Carriage 5/16-18NC x 4
28	2	210-10176	Nut, Hex Centerlock 5/16-18NC
29	2	400-18911	Washer, Flat 5/16
30	1	170-34560	Hydraulic Line Assembly (Standard Hydraulics)
	1	170-34870	Hydraulic Line Assembly (HI-FLOW Hydraulics)
31	1	040-33599	Bracket, Filter Mount
32	1	170-33996	Filter Base With Relief (Standard Hydraulics)
	1	170-34878	Filter Base With Relief (HI-FLOW Hydraulics)
33	2	230-32415	Adjustable Elbow 90° 1 1/16 SAE - 1 5/16 JIC (Standard Hydraulics)
	2	230-32725	Adjustable Elbow 90° 1 5/8 SAE - 1 5/16 JIC (HI-FLOW Hydraulics)
34	2	030-18658	Bolt, Carriage 5/16-18NC x 1
35	2	210-19470	Nut, Hex, Whizlock 5/16-18NC
36	1	170-34561	Hydraulic Line Assembly (Standard Hydraulics)
	1	170-34869	Hydraulic Line Assembly (HI-FLOW Hydraulics)
37	1	230-32189	Connector, Straight 1 5/16 SAE - 1 5/16 JIC
38	2	350-32421	O-Ring 7/16
39	3	350-32426	O-Ring 1 5/16
40	7	350-27267	O-Ring 1 1/16
41	1	170-34559	Hydraulic Line Assembly (Standard Hydraulics)
	1	170-34666	Hydraulic Line Assembly (HI-FLOW Hydraulics) Prior To Serial # SG98B000501
	1	170-34886	Hydraulic Line assembly(HI-FLOW Hydraulics) Start Serial #SG98B000501
42	1	230-18131	Connector, Straight 1 1/16 SAE - 1 5/16 JIC
43	1	170-34761	Hydraulic Hose and Tube Assembly
44	1	170-34895	Filter, Element, Heavy Duty, Optional for Charge Circuit

AUXILIARY CIRCUIT PLUMBING

REF	QTY	PART NUMBER	DESCRIPTION
1	1	170-34544	Control Valve Assembly
2	2	230-29393	Adjustable Elbow 90° 7/8 SAE - 1 1/16 JIC
3	2	350-32424	O-Ring 7/8
4	1	170-34562	Hydraulic Line Assembly
5	1	170-34563	Hydraulic Line Assembly
6	1	390-32778	Tube Clamp 3/4 I.D. Dual
7	1	390-32779	Cover, Plate
8	1	040-33606	Bracket, Line Support
9	1	030-27427	Bolt, Carriage 5/16-18NC X 2 1/4
10	1	210-10176	Nut, Hex, Centerlock 5/16-18NC
11	1	030-18655	Bolt, Carriage 5/16-18NC X 3/4
12	1	210-19470	Nut, Hex, Whizlock 5/16-18NC
13	2	230-32674	Bulkhead Elbow 90° 1 1/16 JIC
14	2	210-32027	Nut, Hex 1 1/16-12
15	1	230-32502	Swivel Elbow 90° 1 1/6 JIC
16	1	170-34623	Hydraulic Hose Assembly
17	1	170-34624	Hydraulic hose and Tube Assembly
18	2	170-19764	Clamp, Tube Line
19	2	210-11247	Nut, Hex, Centerlock 3/8-16NC
20	1	170-34622	Hydraulic Line Assembly, Auxiliary Bottom, Outside
21	1	170-34621	Hydraulic Line Assembly, Auxiliary Top, Inside
22	2	230-18318	Connector, Straight 1 1/16 JIC - 1 1/16 SAE
23	1	100-32167	Quick Coupler, Flat Face Female
24	1	100-32164	Quick Coupler, Flat Face Male
25	2	350-27267	O-Ring 1 1/16
26	4	350-32552	Snap Ring

machinecatalogic.com

FLYWHEEL HOUSING

REF	QTY	PART NUMBER	DESCRIPTION
1	1	425-35030	Housing - Flywheel
2	3	425-34377	Bolt - Sems Housing - Body #12mm x 1.75 x 25
3	2	425-35031	Bolt - Sems Housing - Body #12mm x 1.25 x 30
4	3	425-35032	Bolt - Sems Housing - Body #10mm x 1.50 x 30
5	1	425-35033	Bolt - Reamer
6	1	425-35034	Nut - Reamer
7	1	425-34391	Spring Washer

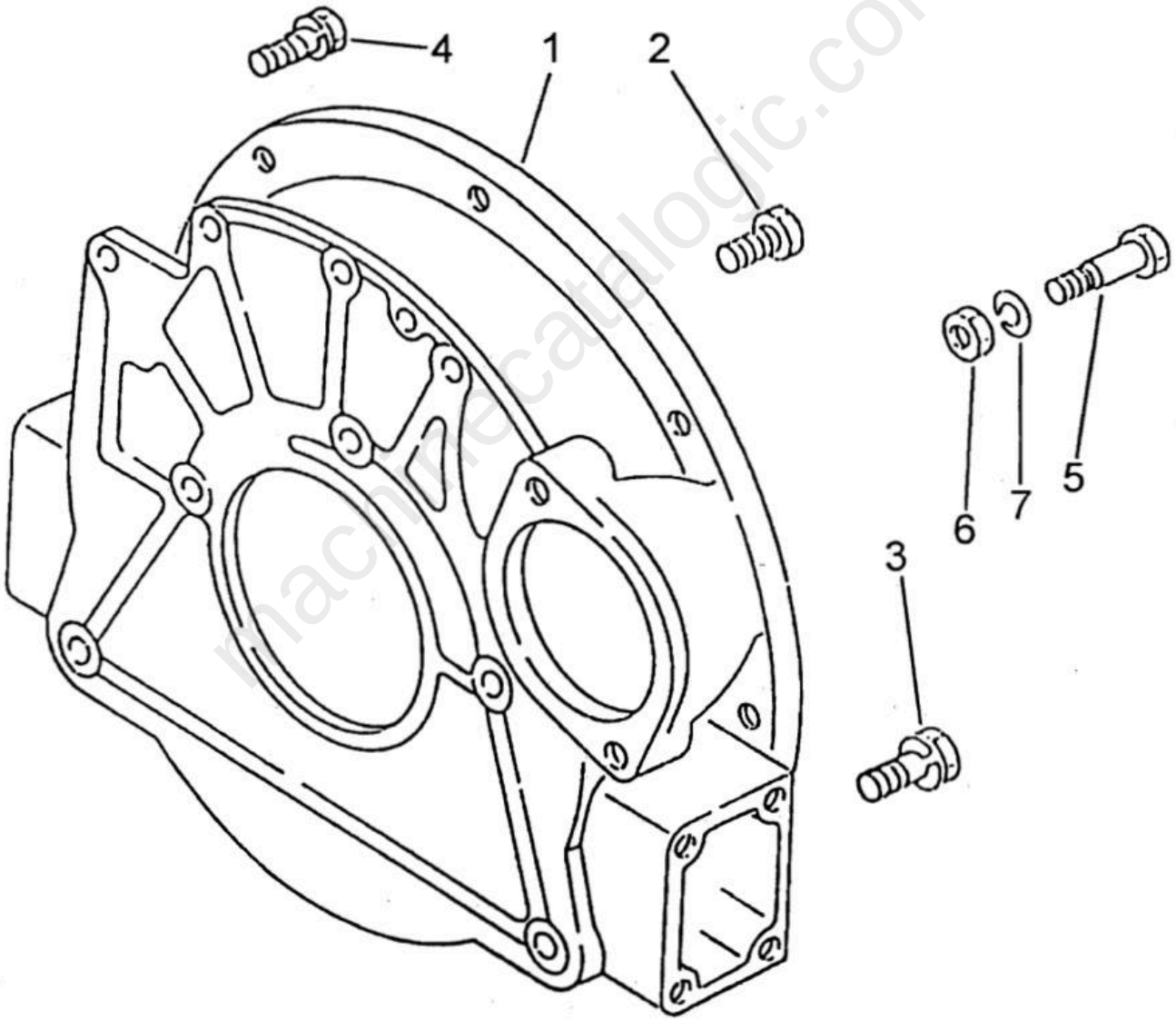

machinecatalogic.com

PART NO.	ITEM	PG.
210-19434	29	87
210-19434	11	123
210-19434	16	123
210-19434	6	129
210-19434	15	131
210-19435	19	5
210-19435	35	17
210-19435	14	25
210-19435	4	127
210-19469	42	5
210-19469	22	17
210-19469	25	85
210-19469	9	131
210-19469	15	135
210-19470	35	7
210-19470	8	19
210-19470	23	29
210-19470	3	31
210-19470	35	61
210-19470	12	69
210-19470	28	77
210-19470	4	79
210-19470	25	87
210-19470	18	131
210-19470	17	133
210-19470	6	135
210-19530	28	7
210-19530	19	89
210-19531	25	89
210-19532	48	7
210-19533	14	19
210-19533	13	85
210-19533	44	85
210-19629	6	121
210-19837	35	81
210-19837	12	125
210-20571	32	17
210-20580	5	126
210-20673	41	81
210-20678	52	7
210-20678	13	89
210-20693	6	7
210-20693	9	13
210-20693	14	15
210-20693	5	25
210-20693	20	27
210-20693	45	57
210-20746	8	23
210-21110	12	21
210-21556	44	27
210-25593	38	17
210-28260	14	9
210-28424	39	79
210-28424	18	85
210-32026	64	71
210-32027	9	63
210-32027	12	67
210-32027	14	69
210-32030	11	17
210-32030	17	31
210-32030	27	133
210-32060	6	74
210-32062	6	126
210-32091	37	19
210-32112	9	32
210-32115	5	75
210-32121	5	81
210-32124	6	75
210-32128	5	74
210-32129	10	55
210-32131	14	29
210-32131	36	81
210-32133	47	19

PART NO.	ITEM	PG.
210-32147	45	19
210-32152	15	23
210-32154	17	5
210-32154	2	59
210-32159	30	17
210-32163	15	21
210-32163	29	39
210-32164	24	81
210-32170	10	27
220-10065	3	7
220-11086	4	13
220-11086	4	15
220-11646	5	120
220-15421	15	121
220-15882	6	120
220-15882	14	121
220-16148	26	29
220-16148	8	40
220-16148	8	46
220-16760	10	125
220-19075	3	13
220-19324	2	35
220-19324	2	37
220-19836	17	9
220-19836	27	29
220-19836	9	40
220-19836	9	46
220-19836	34	85
220-20554	14	7
220-20842	21	21
220-21787	7	29
220-28739	33	85
220-32418	4	125
220-32419	9	125
220-32536	2	7
220-32576	12	11
220-32579	2	65
220-32580	25	63
220-32583	2	17
220-32584	6	55
220-32586	2	13
220-32629	30	63
220-32630	3	11
220-32632	2	15
230-18131	42	61
230-18131	43	71
230-18316	15	61
230-18316	13	71
230-18318	29	57
230-18318	6	61
230-18318	22	69
230-18574	17	57
230-18574	13	125
230-19166	8	59
230-19166	38	71
230-19167	11	57
230-19167	10	59
230-19184	16	59
230-19184	23	71
230-19280	24	77
230-19459	28	57
230-19504	4	85
230-19546	48	5
230-19546	14	65
230-20033	10	25
230-21439	7	5
230-21559	18	125
230-21881	12	23
230-29389	7	71
230-29393	20	67
230-29393	2	69
230-29408	65	71
230-30569	22	63

PART NO.	ITEM	PG.
230-31679	11	59
230-32180	14	63
230-32180	10	67
230-32189	37	61
230-32189	6	71
230-32192	31	57
230-32192	15	61
230-32195	19	61
230-32207	32	79
230-32212	45	71
230-32280	11	87
230-32301	12	59
230-32307	19	125
230-32329	38	5
230-32383	18	67
230-32394	20	61
230-32403	21	61
230-32405	8	71
230-32415	33	61
230-32476	37	39
230-32502	10	63
230-32502	13	67
230-32502	15	69
230-32502	11	87
230-32511	2	63
230-32511	2	67
230-32534	26	77
230-32536	25	77
230-32547	8	55
230-32548	14	55
230-32549	15	55
230-32550	16	55
230-32551	4	42
230-32551	6	43
230-32552	3	44
230-32556	15	67
230-32559	30	67
230-32561	14	59
230-32561	24	71
230-32573	2	85
230-32580	7	61
230-32580	13	63
230-32580	5	67
230-32588	9	25
230-32593	23	57
230-32622	4	77
230-32632	16	133
230-32633	12	135
230-32648	8	61
230-32648	31	71
230-32657	18	61
230-32657	36	71
230-32664	9	5
230-32665	13	77
230-32667	4	59
230-32668	7	59
230-32669	13	57
230-32670	16	57
230-32671	22	71
230-32672	6	67
230-32672	49	71
230-32674	17	63
230-32674	13	69
230-32675	7	63
230-32676	19	57
230-32679	10	65
230-32681	13	59
230-32684	8	35
230-32684	8	37
230-32685	41	39
230-32691	4	71
230-32692	21	61
230-32692	3	71

PART NO.	ITEM	PG.
230-32694	11	25
230-32707	9	67
230-32708	5	61
230-32717	38	57
230-32718	30	35
230-32718	30	37
230-32720	19	57
230-32721	6	45
230-32724		51
230-32725	33	61
230-32726	36	57
230-32727	46	71
230-32728	39	71
230-32729	3	48
230-32729	3	49
230-32729	3	50
230-32730	4	48
230-34849	44	71
240-32091	6	133
240-32101	13	7
240-32103	10	19
240-32104	11	19
240-32107	5	27
240-32108	1	27
245-35130	14	111
246-26431		32
246-26515	31	27
250-32588		39
250-32588	1	59
250-32593	6	57
290-32322	2	32
290-32563	34	81
290-32564	24	7
290-32568	8	27
290-32569	9	27
290-32574	37	27
310-10014	25	19
310-10014	16	87
310-10237	36	17
310-10237	10	89
310-10417	39	19
310-11009	15	13
310-11146	51	85
310-11147	41	19
310-11155	13	123
310-11419	8	133
310-11457	21	17
310-11496	46	57
310-11692	4	25
310-11778	21	63
310-11778	5	125
310-11796	27	11
310-11796	46	17
310-11901	6	131
310-11928	13	11
310-11928	26	63
310-11928	3	65
310-12069	48	85
310-13464	17	89
310-17475	11	121
310-17600	2	44
310-18800	19	31
310-18908	21	15
310-18909	22	19
310-19201	17	29
310-19473	3	61
310-19473	18	87
310-19474	23	79
310-19474	17	131
310-19475	3	5
310-19475	11	9
310-19475	44	17
310-19475	35	19

mowinecatalogic.com

machinecatalogic.com

Full Version Available

Mustang 2070 Skid Steer Loader Parts Manual (000-23978B)

Mustang 2070 skid steer loader parts manual 000-23978 Rev. B: hydraulics, drive system, cab, decals and kits with part lists. Instant PDF download.

VIEW THE FULL MANUAL

https://machinecatalogic.com/mustang-2070-skid-steer-loader-parts-manual-000-23978b/

Publication No.: 000-23978 (Rev. B) · Language: English · Edition: June 2008