2095 / 2105

SKID STEER LOADER

PARTS MANUAL

PART #908276

Mustang Manufacturing Company, Inc., a Gehl® Company

machinecatalogs.com

Mustang 2095 and 2105 Skid Steer Loader Parts Manual (908276)

Document type: Parts Manual (illustrated parts catalogue with part numbers)

Brand: Mustang

Models: 2095 and 2105

Machine: Skid Steer Loader

Publication No.: 908276

Language: English

Main contents

- SECTION A: MAIN LOADER COMPONENTS
- Mainframe with Door, Tanks and Covers
- Controls - Wheel Drives
- Controls - Lift and Tilt
- Auxiliary Hydraulic Controls
- Electrical - Engine
- Electrical - ROPS
- Electrical - Lights
- Electrical - Switch
- Electrical - Controls
- Engine with Throttle
- Hydraulics and Hydraglide Ride Control
- Hydrostatics with Drive Motors - Single and Two Speed
- Liftarm
- Multi-Tach and Electric Actuation
- ROPS
- Restraint Bar
- Seat - Standard and Suspension
- Wheel Drives
- Barge Special
- Decals
- Lift Cylinder
- Tilt Cylinder
- Drive Motor and Parking Brake - Single and Two Speed
- Tandem Pump
- Load-Sensing Axial Piston Pump
- Main Control Valve
- Self-Leveling Valve
- Safety Lock Valves - Lift and Tilt
- Brake Solenoid Valves - Single and Two Speed
- Pump Valve - ROPS Lift Assist and Cylinder
- Backup Alarm Kit 808
- Engine Block Heater Kit 805
- Rear View Mirror Kit 806

machinecatalogic.com

Sample pages follow. Full manual: machinecatalogic.com

TABLE OF CONTENTS

DESCRIPTION **PAGE**

SECTION C: KITS AND ACCESSORIES

Backup Alarm Kit 808413 117
Engine Block Heater Kit 805855 118
Rear View Mirror Kit 806894 118
Strobe Light Kit 805803 119
Cab - Side Window Kit 808403 120
Cab - Front Door Kit 808624 121
Cab - Heater Kit 808626 (*see below*) 122
    Cab - Heater Kit 808626 Service Parts Assemblies 123
Cab - Air Conditioning/Heater Kit 810040 (*see both below*) 124
    Cab - Air Conditioning/Heater Kit 810040 Service Part Assembly 138621 125
    Cab - Air Conditioning/Heater Kit 810040 Service Part Assembly 138617 126
Impact Resistant Front Door Kit 81008 127
Single Point Lift Kit 810101 128
PreCleaner Kit 810102 129
Other Available Accessories 130

SECTION D: SCHEMATICS

ROPS Electrical Schematic 133
Chassis Electrical Schematic 134
Hydrostatic/Hydraulic Schematics 135
Air Conditioning/Heater Combination Schematic 136

Numerical Index 138
O-Ring Table, Coupling & Adapter Torque Table 147
Torque Specifications Table . . . . . Inside Back Cover

machinecatalogs.com

2095 High Flow and 2105 Models

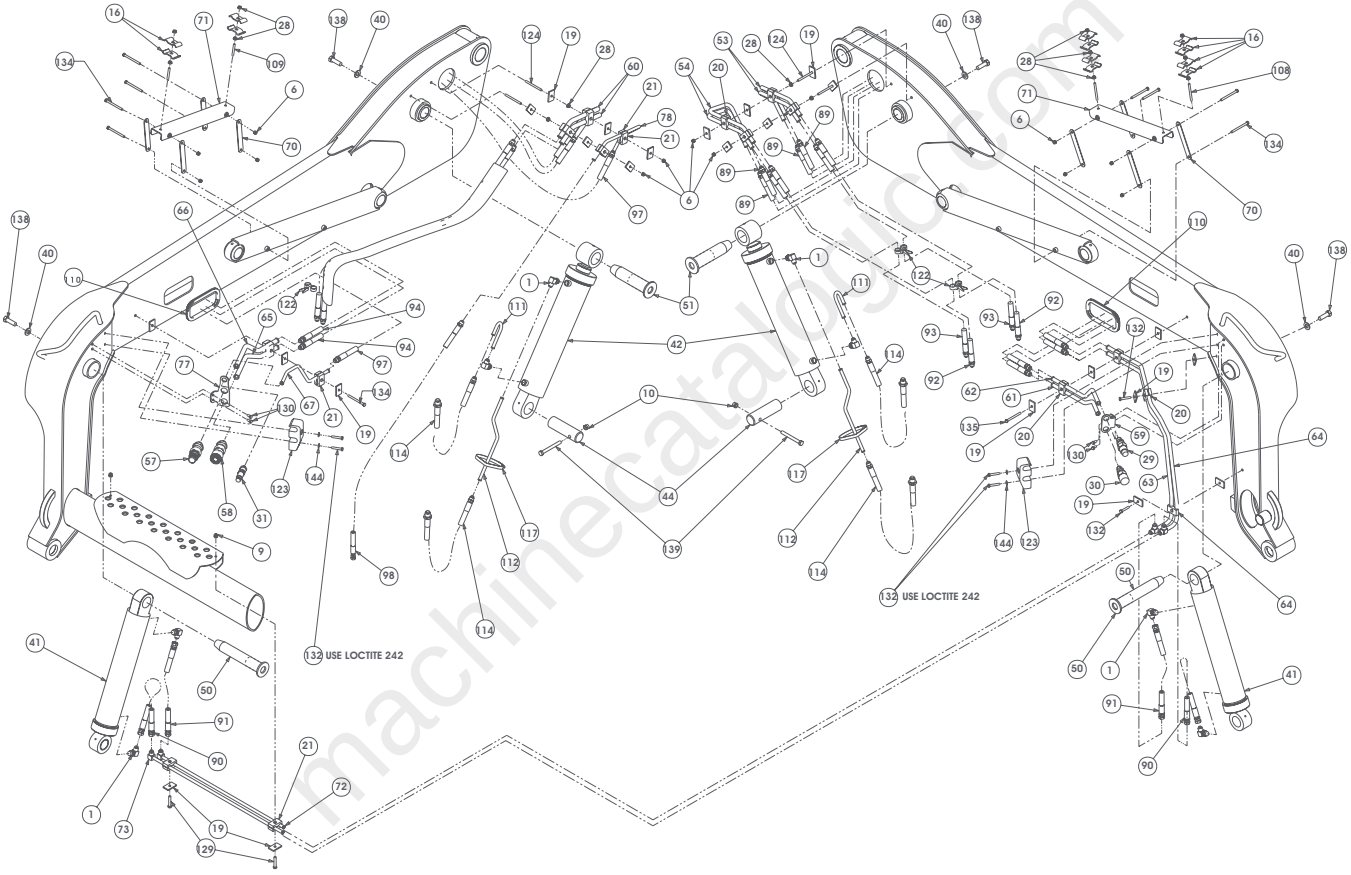

PRESSURE SETTINGS	AMOUNT OF PRESSURE
PUMP SYSTEM PRESSURE	3300±50 PSI @ Full Throttle (228±3 bar)

138121cgm2.cgm

Ref. No.	Part No.	Description	Quantity Barge Special
1	070634	NUT/SERRATED LOCK 1/4	3
2	087849	CLAMP/HOSE #52	4
3	136100	TUBE/AIR CLEANER	1
4	137081	ELBOW 90°/AIR CLEANER	1
5	139001	PRECLEANER/AIR	1
6	139025	TUBE/FLANGED	1
7	139035	ASSEMBLY/ENGINE COVER	1
8	139748	HOSE/AIR DUCT	1
9	651307	SCREW/PHILLIPS PAN HEAD 1/4 X 1/2	3
10	137370	SCREW/MACHINE PAN HEAD #6 X 3/8	2
11	139329	ASSEMBLY/LIGHT BAR/RED LED	1
12	139331	MODULE/CONTROL INTERLOCK	1
13	139333	CLIP/CORD/ADHESIVE BACK	2
14	131842	NUT/SPIRALOCK™ 5/16	6
15	132346	SPACER/PIVOT	1
16	139489	PLATE/CONTROL ADAPTER	2
17	139043	RADIATOR/6 FPI W/ OIL	1
18	139059	ASSEMBLY/ENCLOSED ALTERNATOR	1
19	139989	PLUG	2

Ref. No.	Part No.	Description	Quantity 139059
1	064260	NUT/HEX 5/16	1
2	067847	NUT/HEX 3/8	2
3	128802	HARNESS/ADAPTER	1
4	139042	PULLEY/ALTERNATOR	1
5	139051	ALTERNATOR/ENCLOSED 45 A	1
6	139054	PLATE/SPACER	2
7	139055	PLATE/MOUNTING	2
8	139058	SPACER/ALTERNATOR	2
9	139106	BRACKET/RADIATOR SUPPORT	1
10	139307	BRACKET/ALTERNATOR	1
11	139498	V-BELT	1
12	650487	SCREW/CAP 5/16 X 1	1
13	650729	SCREW/CAP 3/8 X 3-3/4	2
14	650732	SCREW/CAP 5/16 X 3-3/4	1
15	654004	WASHER/FLAT 5/16	3

mymecatalogic.com


11


14
WARNING


11


WARNING
15


11


10

Cab - Side Window Kit 808403

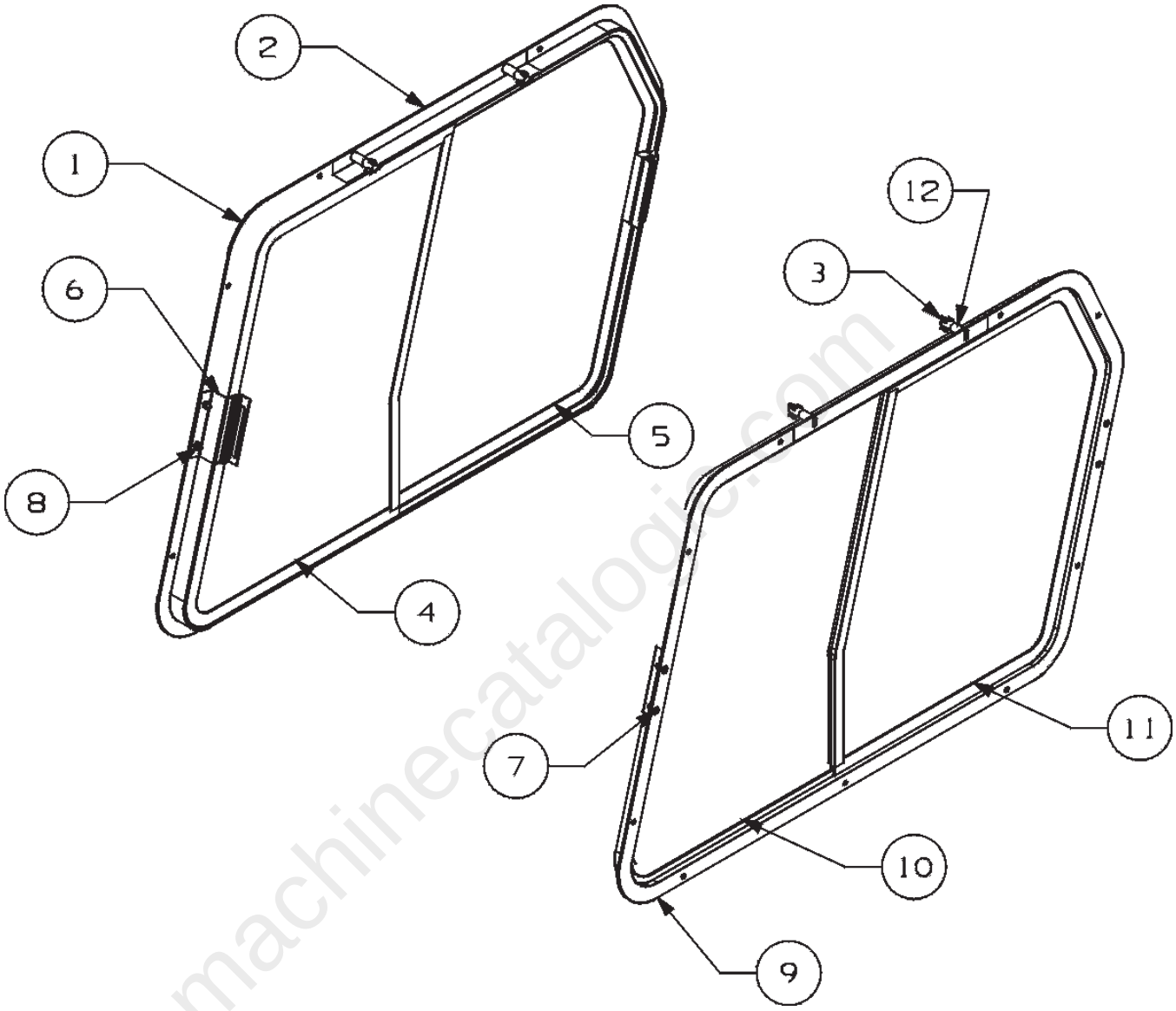

machinecatalogic.com

Ref. No.	Part No.	Description	Qty. Req.
	808403	KIT/SIDE WINDOW	1
1	137735	MAINFRAME/RIGHT	1
2	137736	TRACK/TOP	2
3	137737	FASTENER/THUMB	4
4	137738	SLIDER/FRONT RIGHT ASSEMBLY	1
5	137739	SLIDER/REAR RIGHT ASSEMBLY	1
6	137743	PLATE/STRIKER	4
7	137744	SCREW/PHILLIPS 8-32 x 38	8
8	137745	NUT/LOCKING 8-32	8
9	137774	MAINFRAME/LEFT	1
10	137775	SLIDER/FRONT LEFT ASSEMBLY	1
11	137776	SLIDER/REAR LEFT ASSEMBLY	1
12	137923	SPACER/THUMB FASTENER	4

Full Version Available

Mustang 2095 and 2105 Skid Steer Loader Parts Manual (908276)

Mustang 2095 and 2105 skid steer loader parts manual 908276: hydraulics, electrical, cab kits, decals and more. Instant PDF download.

VIEW THE FULL MANUAL

https://machinecatalogic.com/mustang-2095-and-2105-skid-steer-loader-parts-manual-908276/

Publication No.: 908276 · Language: English