7503ZT
8003

Compact Excavator

OPERATOR'S MANUAL

PART #918082

Revision D - 08/11

machinecatalogic.com

Mustang 7503ZT and 8003 Compact Excavator Operator Manual (918082D)

Document type: Operator Manual (operation, controls, safety and routine maintenance)

Brand: Mustang

Models: 7503ZT and 8003

Machine: Compact Excavator

Publication No.: 918082 (Rev. D)

Edition date: August 2011

Language: English

Main contents

- Chapter 1 - General Information
- Introduction
- Specifications
- 7503ZT General Specifications
- 8003 General Specifications
- Checklists
- Chapter 2 - Safety
- Safety Alerts
- General Safety Rules
- Mandatory Safety Shutdown Procedure
- Operation Safety
- Fire Hazards
- Additional Safety Equipment
- Maintenance Safety
- Lifting the Machine with a Crane
- Transporting
- Safety Decals
- Chapter 3 - Operation
- Operating Controls
- Machine Operation
- Optional Controls
- Chapter 4 - Maintenance
- General Care and Servicing Information
- Maintenance Schedule
- Long-Term Storage
- Chapter 5 - Troubleshooting
- Engine
- Indicator Lamps
- Seals and Hoses
- Traveling Gear
- Bucket, Boom and Dozer Blade
- Engine Error Codes

machinecatalogic.com

Sample pages follow. Full manual: machinecatalogic.com

Engine Serial Number Location

The engine serial number label is located on the cylinder head cover

Engine serial number label
Excavators serial numbers AH00611 and up

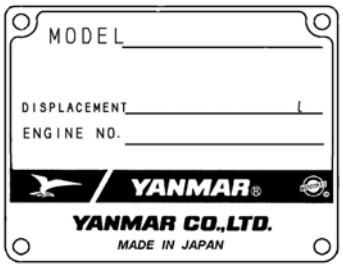



Engine serial number label
Excavators serial numbers AH00610 and before

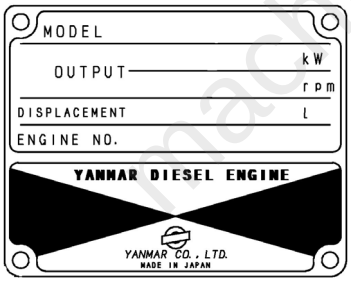

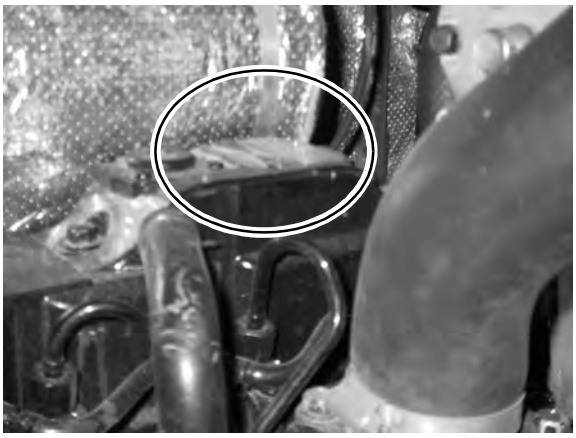

Ownership Change

If the machine was purchased “used,” or if the owner’s address has changed, please provide your dealer or Manitou Americas, Inc. Service Department with the owner’s name and current address, along with the machine model and serial numbers. This allows for updating the registered owner information, so the owner can be notified directly in case of an important product issue, such as a safety update program.

machinecatalogic.com

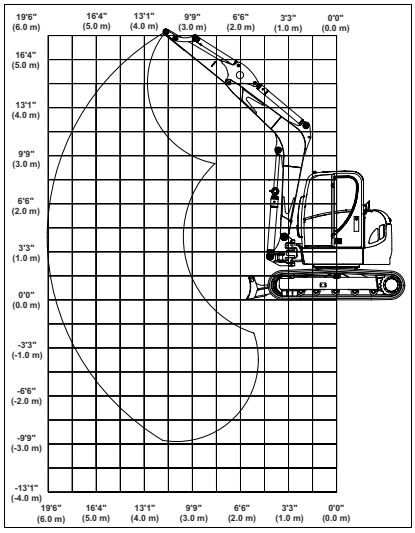

Max. permissible loads (standard dipper w/counterweight)

A / B	MAX.		16'4" (5.0 m)		13'1" (4.0 m)		9'9" (3.0 m)		6'6" (2.0 m)	
13'0" (4.0 m)	3957* (1795*)	2348 (1065)	3935* (1785*)	2557 (1160)	4112* (1865*)	3770 (1710)				
9'9" (3.0 m)	3880* (1760*)	1973 (895)	4090* (1855*)	2513 (1140)	4696* (2130*)	3594 (1630)				
6'6" (2.0 m)	3880* (1760*)	1797 (815)	4453* (2020*)	2392 (1085)	5589* (2535*)	3307 (1500)				
3'3" (1.0 m)	3913* (1775*)	1731 (785)	4795* (2175*)	2260 (1025)	6360* (2885*)	3031 (1375)				
0'0" (0.0 m)	3957* (1795*)	1775 (805)	4916* (2230*)	2172 (985)	6603* (2995*)	2888 (1310)	9733* (4415*)	4266 (1935)		
-3'3" (-1.0 m)	3968* (1800*)	1940 (880)	4630* (2100*)	2150 (975)	6261* (2840*)	2855 (1295)	8796* (3990*)	4321 (1960)	12,522* (5680*)	9039 (4100)
-6'6" (-2.0 m)	3836* (1740*)	2381 (1080)			5170* (2345*)	2943 (1335)	7088* (3215*)	4464 (2025)	10,053* (4560*)	9259 (4200)

Maximum permissible load on standard dipper arm	
A	Overhang from the center of the turntable.
B	Height of load fixing point
*	Lifting capacity hydraulically limited.

All table values are in lbs. (kg) and for a machine in a horizontal position on firm ground without bucket.

	Dozer blade support in drive direction
	Dozer blade support 90° to drive direction

If equipped with a bucket or other implements, lift capacity or tilt load is reduced by bucket or implement weight.

Calculation basis: According to ISO 10567.

The excavator's lift capacity is restricted by the settings of the pressure relief valves and the hydraulic system's stabilizing features.

Neither 75% of the static tilt load nor 87% of the hydraulic lift capacity is exceeded.

machine-all.com

ISO-Style Safety Decal Locations (Serial Numbers AH00859 and Up)

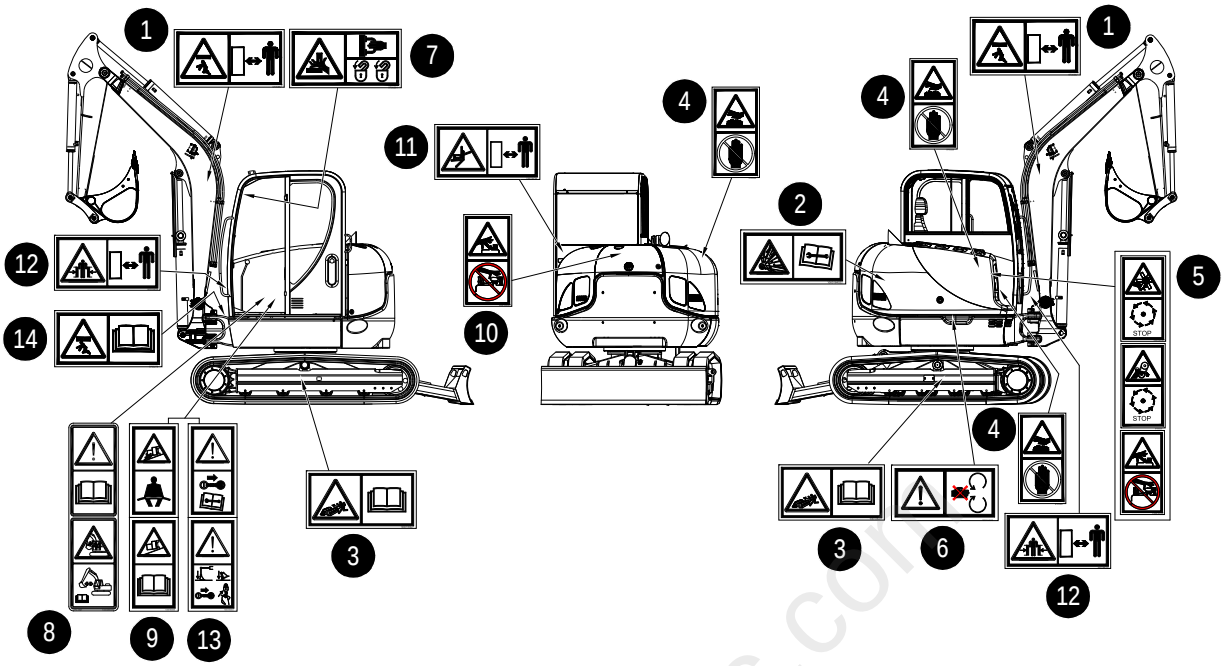

1

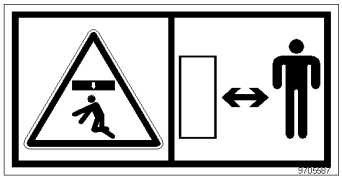

WARNING! Danger Zone Decal

AVOID INJURY OR DEATH!

Located on both sides of the boom.

Keep bystanders away from the machine when it is in use.

2

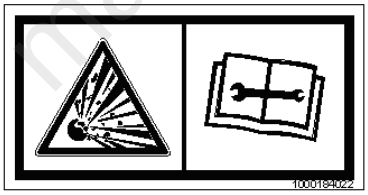

WARNING! Hydraulic Reservoir Under Pressure

AVOID INJURY OR DEATH!

Located inside the hydraulic valve compartment.

Relieve hydraulic pressure before servicing machine. Removed hydraulic reservoir cap slowly.

Refer to the maintenance section in the operator's manual before servicing the machine.

3



WARNING! Stay Clear Decal

AVOID INJURY OR DEATH!

Located next to the track tension grease fitting on both sides of the machine.

WARNING! Grease is under high pressure. Keep your face and body away from the fitting.

Do not loosen the fitting more than two turns. Do not loosen parts other than the fitting.

Refer to the operator's manual for track adjustment procedure.

4



WARNING! Hot Surfaces Decal

AVOID SERIOUS INJURY!

Located inside the engine compartment.

Stop the engine and wait for all parts to cool before opening the engine compartment. Hot surfaces can cause severe burns.

Read the operator's manual before performing any maintenance on the machine.

machinecatalogic.com

Figure 3-5 Instrument Panel, Switches and Indicators (Serial Numbers AJ02793 and up)

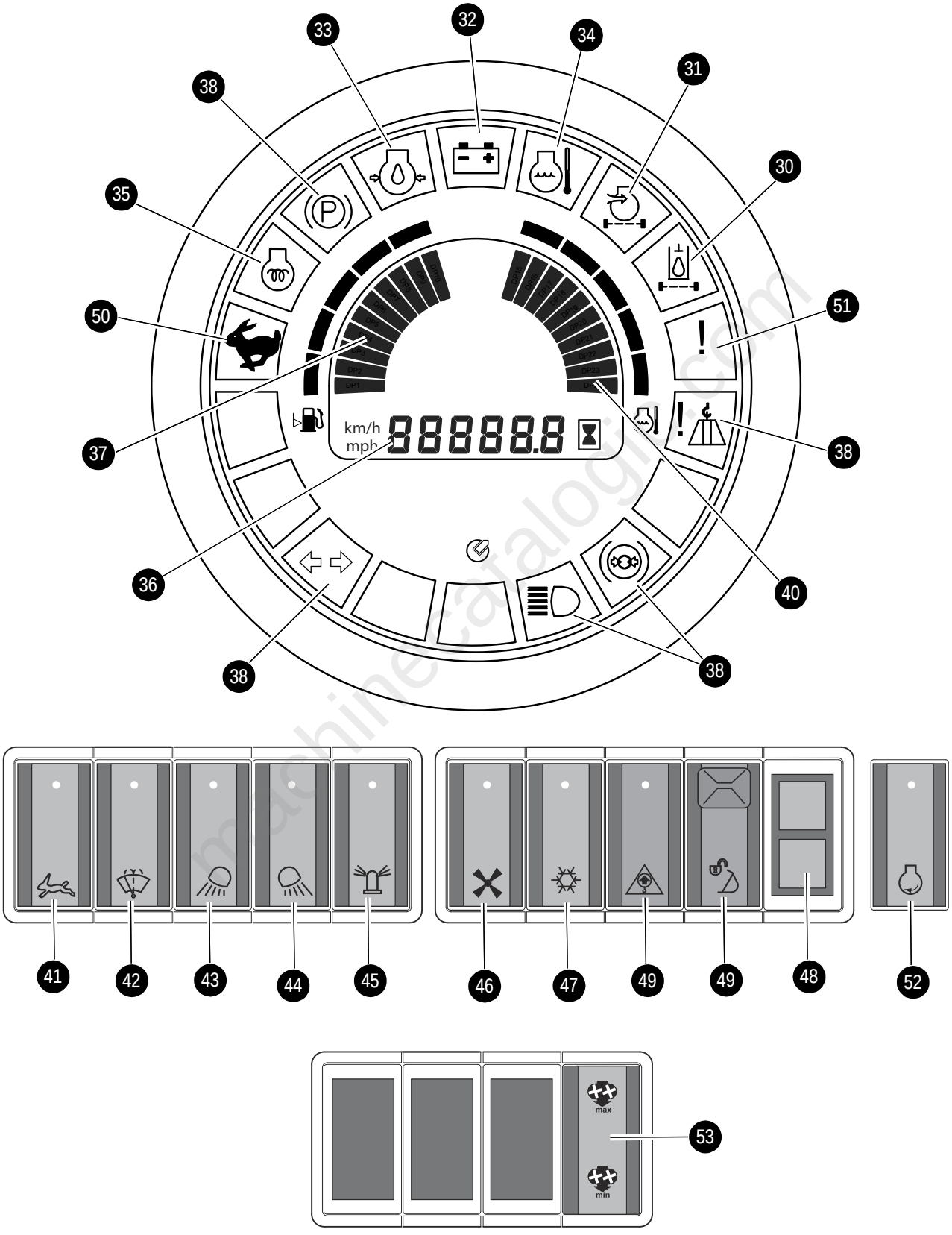

machinecatalogic.com

IMPORTANT

Indicator lamps should go out when the engine starts. If they do not, turn the engine off IMMEDIATELY. Do not use machine until the problem has been identified and repaired.

7. Allow engine to warm up at idle speed for approximately 10 - 15 minutes to fully warm up all systems.
8. Test the controls.

Cold Weather Engine Starting Procedure

Note: *Install an in-block or tank style engine heater which will keep engine block and oil warm for easier cold weather starting.*

Note: *Be sure the engine oil is correct type and viscosity for the ambient (air) temperature.*

Note: *Be sure the battery is fully charged.*

1. Follow all steps according to "Engine Start Procedure" on page 3-30.
2. Advance the throttle to 1/4 engine speed for a faster warm up.
3. As the engine warms up, move the throttle lever to the idle position.

After Starting/During Operation

Check the following after startup and during operation. Stop the engine and fix problems before continuing operation.

1. Warning indicator lights on?
2. Travel drive/steering operating properly?
3. Boom, dipper, cab rotation and bucket controls operating properly?
4. Engine exhaust excessively smoky?

Engine Shut Down

Mandatory Safety Shutdown Procedure

Before leaving the machine:

1. Bring the machine to a complete stop on a level surface. Avoid parking on an incline or a hillside, but if this is not possible, park across the slope.
2. Lower the working equipment to the ground and support it securely.
3. Run the engine at idle speed for a few minutes to allow systems to cool after operation at full speed.
4. Turn the key fully counter-clockwise to shut off the engine. Wait for all movement to stop.
5. Move the joysticks in all directions to verify the hydraulic system is de-pressurized.
6. Lock-out controls by raising left control console.
7. Remove the ignition key and take it with you. Exit the machine using the hand-holds.

New Machine Break-in Procedure

A new machine requires reduced operational speed during the first 50 operating hours to properly break in various parts. If the machine is subjected to hard use during the break-in period, damage to operating systems may occur.

Perform the following when operating a new machine:

- Perform all steps in "Pre-Operation Checklist" on page 3-29.
- Start engine and let it idle for 10 - 15 minutes so all components and systems can warm up.
- Operate machine at about 80% of maximum loads and speed.
- At the end of the first 100 operational hours, drain and replace the engine oil and engine oil filter.

machinecatalogs.com

- When excavating, lower the dozer blade to the ground to aid machine stability. Whenever possible, it is best to position the dozer blade on the same side as the excavation.
- Do not support the weight of the machine on one side of the dozer blade.

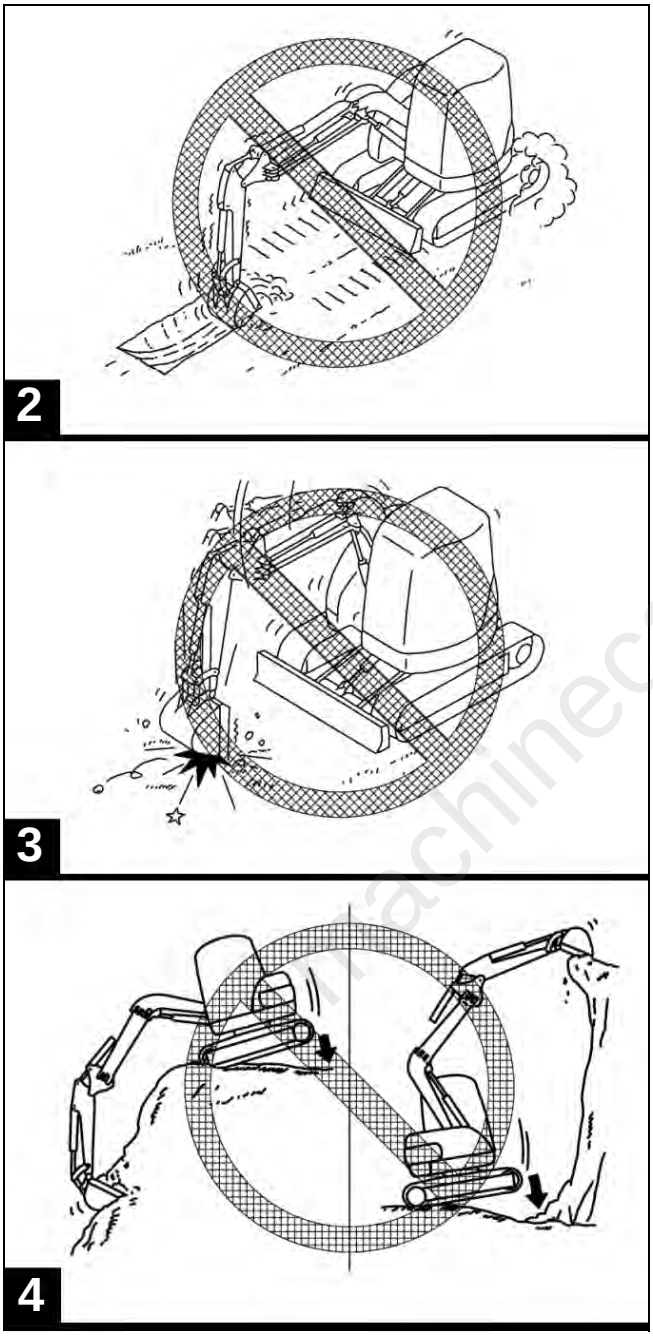

Figure 3-47 Machine Operation Exclusions

Digging

Proper Bucket Position

Move the flat side of the bucket so it is parallel to the ground (Figure 3-48).

IMPORTANT

Positions 2 and 3 in Figure 3-48 show improper bucket orientations while excavating.
Position 2 forces the bucket downward into the ground, slowing down work and subjecting the engine and hydraulic pump to overloading.
Position 3 forces the bucket upward toward the ground surface, reducing productivity because of reduced bucket loads.

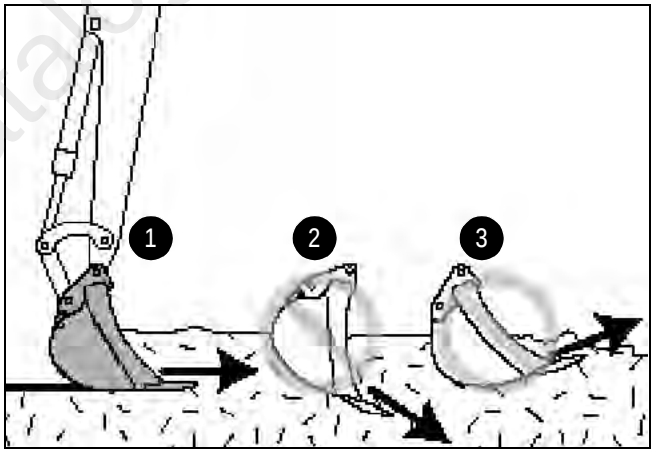

Figure 3-48 Proper and Improper Bucket Orientations

Proper Digging Technique

1. Lower the bucket into the ground (4, Figure 3-49).
2. After the bucket penetrates the ground, adjust it so its flat side is parallel to the ground (5, Figure 3-49).
3. Pull the bucket towards the excavator by:
   a. Moving the dipper arm toward the excavator, and
   b. Lowering the boom.

machinecatalogic.com

Lubrication

Service Activity	Daily	Every 50 Hours	Every 250 Hours	Every 500 Hours	Every 1000 Hours	Customer	Dealer
Dozer blade	x					x	
Swivel console	x					x	
Boom	x					x	
Dipper arm	x					x	
Attachments	x					x	
Chassis (front of undercarriage)	x					x	

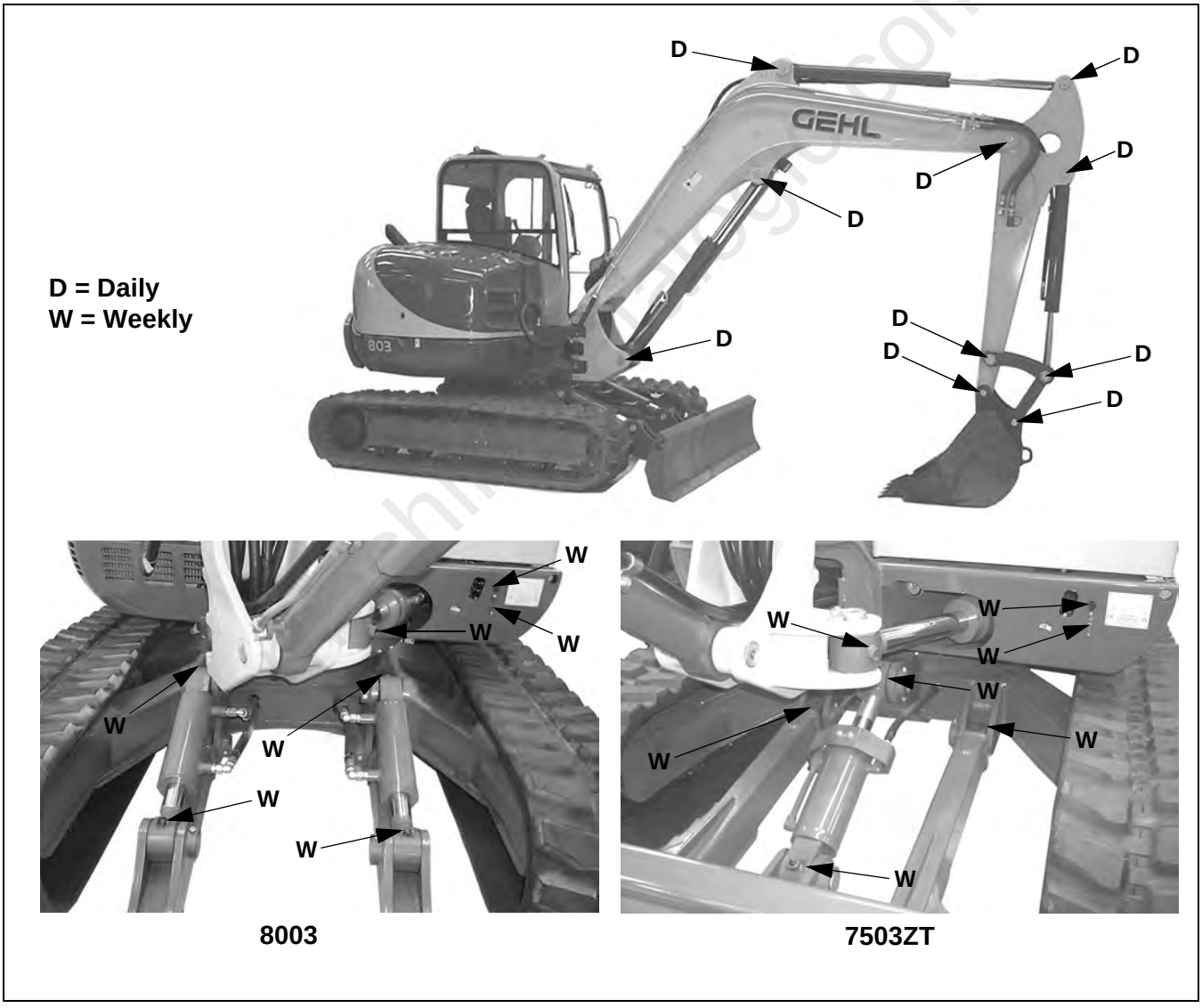

Figure 4-1 Lubrication Points

During Storage

About once each month, connect the battery and check all fluid levels to make sure they are at the proper level before starting the engine.

Start the engine and allow it to run until it warms up and then move the machine a short distance to help relubricate the internal parts. Run the engine until the battery has a chance to recharge and then shut it off.

IMPORTANT

If it is desired to operate the hydraulic cylinders at this time, BE SURE to wipe the protective grease (and any adhering dirt) from the cylinder rods prior to starting the engine. After operating, BE SURE to recoat the cylinder rods with grease if the machine is to be returned to storage.

After Storage

After removing the machine from storage and before operating it, perform the following:

1. Replace and re-connect the battery.
2. Wipe off grease (and any adhering dirt) from cylinder rods.
3. Check V-belt tension.
4. Check all fluid levels and top-off as necessary.
5. Start the engine. Observe all indicators. If all indicators are functioning properly and reading normally, move the machine outside.
6. When outside, park the machine and let the engine idle for at least five minutes.
7. Shut off the engine and walk around machine. Make a visual inspection looking for evidence of leaks.
8. Review and re-familiarize yourself with all safety precautions starting on page 2-1.
9. Follow the starting and warm-up procedures according to starting on page 3-30.

machinecatalogic.com

machinecatalogic.com

Full Version Available

Mustang 7503ZT and 8003 Compact Excavator Operator Manual (918082D)

Mustang 7503ZT and 8003 compact excavator operator manual 918082 Rev. D: safety, controls, maintenance, fault codes, specs. Instant PDF download.

VIEW THE FULL MANUAL

Publication No.: 918082 (Rev. D) · Language: English · Edition: August 2011