ML360

All-Wheel-Steer Loader

OPERATOR'S MANUAL

PART #918293

Revision B - 12/09

machinecatalogs.com

Mustang Manufacturing Company, Inc.

Mustang ML360 All-Wheel-Steer Loader Operator Manual (918293B)

Document type: Operator Manual (operation, controls, safety and routine maintenance)

Brand: Mustang

Models: ML360

Machine: All-Wheel-Steer Loader

Publication No.: 918293 (Rev. B)

Edition date: December 2009

Language: English

Main contents

- Introduction
- Safety
- Operation
- Troubleshooting
- Maintenance
- Specifications

machinecatalogic.com

Sample pages follow. Full manual: machinecatalogic.com

- Turn off all electrical equipment before connecting leads to the battery, including electrical switches on the battery charger or jump-starting equipment.
- When disconnecting at the battery terminals, remove the cable connected to the negative terminal first. When installing a battery, connect the positive terminal cable first.
- Sparks and open flames can set off explosive battery gas from incidental contact or static discharge. Turn off all switches and the engine when working on batteries. Keep battery terminals tight. Contact between a loose terminal and post can create an explosive spark.
- When jump-starting from another machine, do not allow the machines to touch. Wear safety glasses or goggles while battery connections are made.
- Connect positive cable first when installing jumper cables. The final cable connection, at the metal frame of the machine being charged or jump-started, should be as far away from the batteries as possible.
- Never jump-start the machine if it has a frozen battery. The battery could explode. Thaw a frozen battery before charging it or attaching jumper cables.
- Flush eyes with water for 10-15 minutes if battery acid is splashed in the face. Anyone swallowing battery acid must have immediate medical aid. Call the Poison Control Center at 1-800-222-1222 in the United States.

Fire Hazards

- The machine must be cleaned on a regular basis to avoid the buildup of flammable debris, such as leaves, straw, etc. Accumulated debris, particularly in the engine compartment, creates a fire hazard.
- The machine has several components that operate at high temperatures under normal operating conditions, primarily the engine and exhaust systems. Also, the electrical system, if not properly maintained or if damaged, can arc or produce sparks. These conditions make it extremely important to avoid circumstances where explosive dust or gases can be ignited by arcs, sparks or heat.
- Add fuel, oil, antifreeze and hydraulic fluid to the machine only in well ventilated areas. The machine must be parked with controls, lights and switches turned off. The engine must be turned off before fueling.
- Do not smoke while filling the fuel tank, while working on the fuel or hydraulic systems, or while working around the battery.
- Static electricity can produce dangerous sparks at the fuel-filling nozzle. In very cold, dry weather or other conditions that could produce static discharge, keep the tip of the fuel nozzle in constant contact with the neck of the fuel-filling nozzle, to provide a ground. Be sure that the ground is connected from the machine to the service truck before fueling begins.
- Keep fuel and other fluid reservoir caps tight and do not start the engine until caps have been secured
- It is recommended that a 2.27 kg (5 lbs.) or larger, multi-purpose “A/B/C” fire extinguisher be mounted within reach of the operator. Check the fire extinguisher periodically and be sure that work site crew members are trained in its use.
- Oil leaks can ignite on hot components. Repair any damaged or leaking components before using machine.

machine2catalogic.com

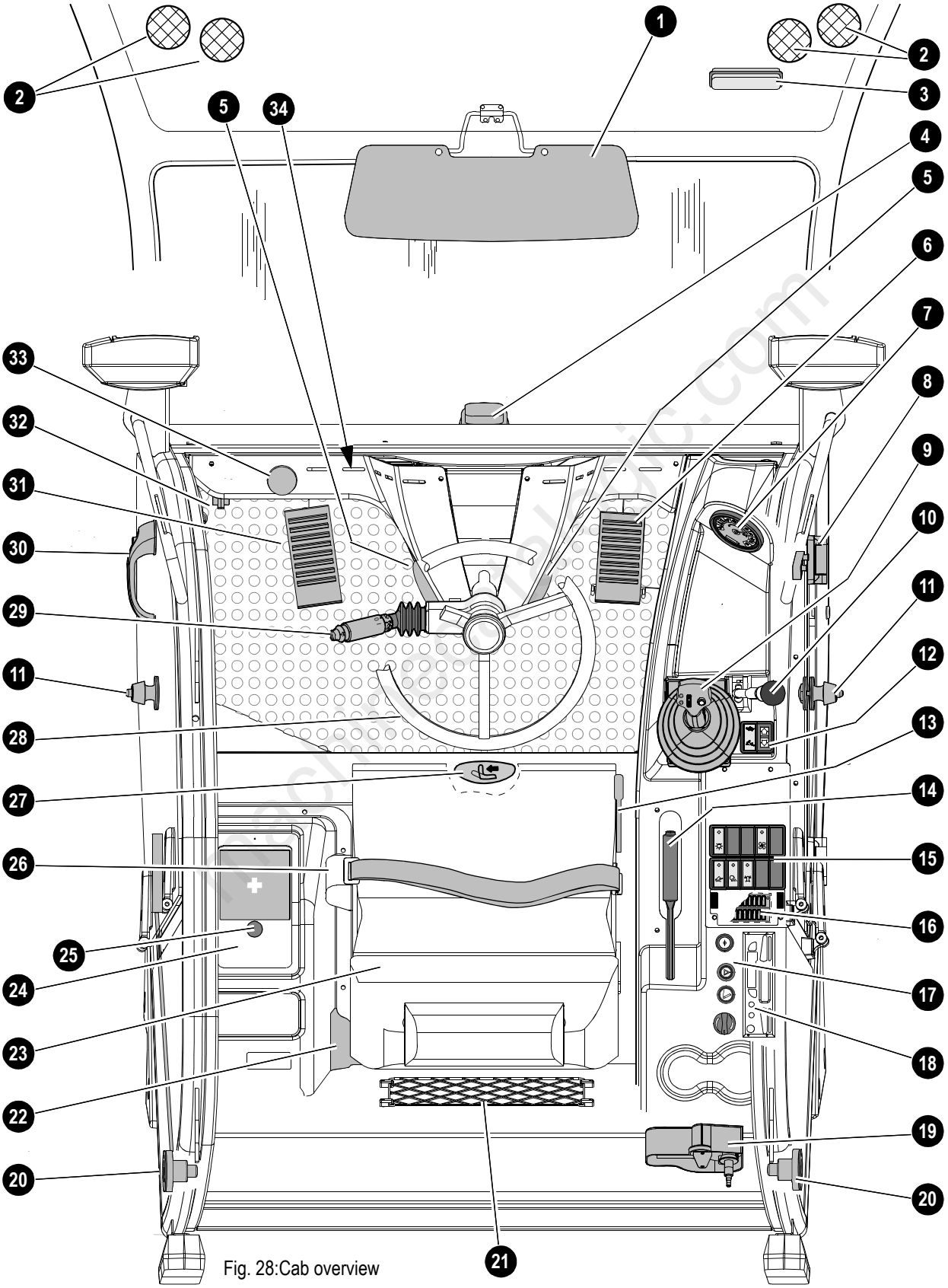

Fig. 28:Cab overview

Inspection and adjustment of important functional units

Steering

☞ *Functional check: Move the steering wheel to the left and right.*

IMPORTANT!

The power steering system is only operational when the engine is running. But if the engine or hydraulic steering fails (e.g., failure of the pump drive), the machine can still be steered.

CAUTION!

If the power steering fails, turning the steering wheel requires greater effort. Take this into account especially when towing the machine.

☞ *Adapt towing speed to the steering.*

☞ *Use a tow bar.*

Wheel synchronization position

IMPORTANT!

The machine has self-synchronizing axles. If you notice that the wheels on the axles do NOT run in the same track – *see Synchronizing the steering system* on page 58.

Service brake/inching pedal

The rear brake lights do not come on when you:

- Brake by applying the parking brake.
- Brake hydrostatically with the drive.

☞ *Only pressing brake/inching pedal 28/**31** causes the brake lights to come on.*

WARNING!

Dirt accumulating around the brake pedal can result in brake malfunctions–

Accident risk.

☞ *Always keep brake/inching pedal 28/**31** clean.*

☞ *Before driving the machine, press brake/inching pedal 28/**31** down and check:*

- For resistance after pressing the pedal down to about 50% of its maximum travel.
- If the brake lights come on after you press the brake pedal down.

☞ For resistance after pressing the pedal down at a low speed.

machinecatalogic.com

Transporting with a full bucket

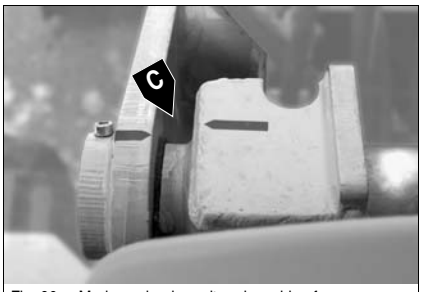

Fig. 90: Marks on loader unit and machine frame

WARNING!

Transporting full buckets in the raised position is an –

Accident risk.

Pay attention to this when cornering or driving on slopes. The lower the bucket and center of gravity, the less risk there is of tipping over.

To avoid accidents:

☞ *Tilt the bucket all the way back* **A**.

☞ *Raise the bucket to the transport position:*

➥**B** and **C**.

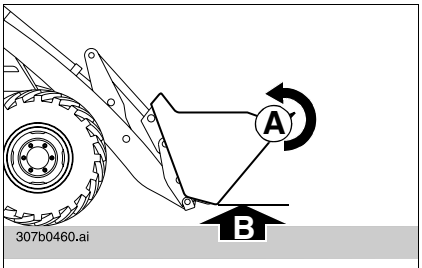

Fig. 91: The transport position of the bucket

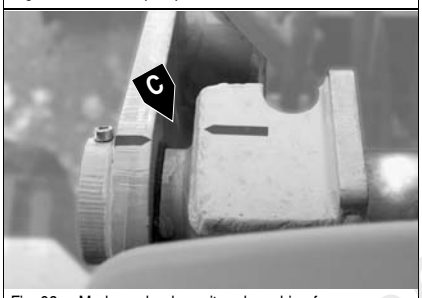

Fig. 92: Marks on loader unit and machine frame

Loading loose material

☞ *Align the blade flush with the ground* ***A.***

☞ *Lower the bucket to the ground* ***B****. To do this:*
Push control lever forward ***C.***

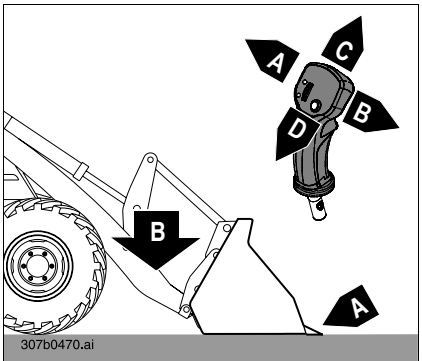

Fig. 93: Lowering the loader unit

machinecatalogic.com



Fig. 116: Cleaning the oil cooler

☞ *Park the machine on level ground.*

☞ *Lower the loader unit to the ground.*

☞ *Engage the parking brake.*

☞ *Shut off the engine and let it cool.*

☞ *Remove the ignition key.*

☞ *Open the engine cover.*

☞ *Clean the radiator fins by blowing compressed air through the radiator from the engine side.*

Checking the coolant level

DANGER!

Never open the coolant tank filler cap or drain coolant when the engine is hot. The cooling system is under high pressure -

Risk of burns.

☞ *Wait at least 10 minutes after shutting off the engine.*

☞ *Wear protective gloves and clothing.*

☞ *When opening the coolant filler cap, always loosen the cap to the first notch to release the pressure in the cooling system.*

IMPORTANT!

Check the coolant level every **10 service hours** or once a day.
Check before starting the engine.

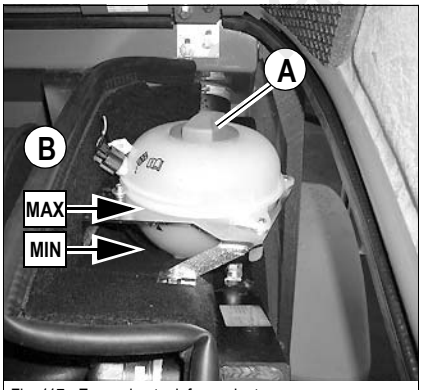

Fig. 117: Expansion tank for coolant

☞ *Check the coolant level as follows:*

- Park the machine on level ground.
- Lower the loader unit to the ground.
- Apply the parking brake.
- Shut off the engine.
- Remove the ignition key.
- Open the engine cover.
- Check the coolant level in the expansion tank **A**.

If the coolant level is below the **MIN** mark **B** on the expansion tank:

- Add coolant to the **MAX** mark **B**.

☞ *Check the coolant quality (antifreeze) with suitable testing equipment (antifreeze tester) – see Fluids and Lubricants on page 140.*

machinecatalogic.com

Tire Care

WARNING!

Improper tire repairs present an –

Accident risk.

☞ *All tire and rim repairs must only be completed by authorized personnel.*

IMPORTANT!

Regular inspection of the tires:

- Improves operating safety,
- Increases the service life, and
- Can reduce machine downtime.

– *see Specifications* on page 151 for the authorized tire types and the correct tire pressures. Machines are also delivered with a tire table decal on the front window or on the loader unit bulkhead.

Tire check



Daily check

☞ *Complete the following maintenance daily:*

- Check tire pressure.
- Check the inside and outside of tires and rims for damage (cracks, aging, etc.).
- Remove objects from the tire tread.
- Remove oil and grease.

Weekly check

☞ *Complete the following maintenance weekly:*

- Check tires for wear and measure tread depth.

machine-catalog.com

Steering

Steering		
Type	Hydrostatic four-wheel steering with emergency steering feature	
Steering mode	Four-wheel steering	
Assemblies	Hydraulic pump, steering unit with flanged priority valve, steering cylinder, self-synchronizing in left and right final position	
Max. pressure of hydraulic lines	2538 – 2611 psi (175 – 180 bar)	
Hydraulic pump (gear pump)	Displacement 1.4 in.³/rev (22.5 cm³/rev)	Displacement 2.0 in.³/rev (32.0 cm³/rev)
Maximum steering angle	±40°	

Work Hydraulics

Hydraulic pump	Gear pump	
Displacement	2.0 in.³/rev (32.0 cm³/rev)	
	18.8 gpm (71 L/min) at 2300 rpm	
Control valve	3 sections (control circuits)	
Max. service pressure	3191 psi (220 bar)	
Secondary pressure limiting	Tilt cylinder	Rod side 3481 psi (240 bar) Bottom side 1450 psi (100 bar)
	Lift cylinder	Bottom side 3481 psi (240 bar)
Filter	Suction return filter	

Pilot Control

Pilot control pump	
Joystick	Four-way lever – control of lift and tilt cylinders With mechanical lock preventing unintended actuation and electric control switch for driving direction and neutral
3rd control circuit control lever	Lock against unintentional operation (for long-haul travel and transport)

machinecatalogic.com

machinecatalogic.com

Full Version Available

Mustang ML360 All-Wheel-Steer Loader Operator Manual (918293B)

Mustang ML360 all-wheel-steer loader operator manual 918293 Rev. B: controls, daily checks, maintenance, fluids, specifications. Instant PDF download.

VIEW THE FULL MANUAL

https://machinecatalogic.com/mustang-ml360-all-wheel-steer-loader-operator-manual-918293b/

Publication No.: 918293 (Rev. B) · Language: English · Edition: December 2009